US009409038B2

(12) **United States Patent**
Nakaji et al.

(10) **Patent No.: US 9,409,038 B2**
(45) **Date of Patent: Aug. 9, 2016**

(54) **APPARATUS FOR LOADING DOSIMETRICALLY CUSTOMIZABLE BRACHYTHERAPY CARRIERS**

(71) Applicant: **GAMMATILE LLC**, Gilbert, AZ (US)

(72) Inventors: **Peter Nakaji**, Phoenix, AZ (US); **David Brachman**, Phoenix, AZ (US); **Heyoung McBride**, Phoenix, AZ (US); **Emad Youssef**, Tempe, AZ (US); **Theresa Thomas**, Gilbert, AZ (US)

(73) Assignee: **GammaTile LLC**, Gilbert, AZ (US)

(*) Notice: Subject to any disclaimer, the term of this patent is extended or adjusted under 35 U.S.C. 154(b) by 0 days.

(21) Appl. No.: **14/605,272**

(22) Filed: **Jan. 26, 2015**

(65) **Prior Publication Data**

US 2015/0196778 A1 Jul. 16, 2015

Related U.S. Application Data

(63) Continuation of application No. 13/460,809, filed on Apr. 30, 2012, now Pat. No. 8,939,881.

(60) Provisional application No. 61/480,304, filed on Apr. 28, 2011.

(51) **Int. Cl.**
A61M 36/00 (2006.01)
A61N 5/10 (2006.01)

(52) **U.S. Cl.**
CPC ***A61N 5/1014*** (2013.01); ***A61N 5/103*** (2013.01); ***A61N 5/1007*** (2013.01); ***A61N 5/1027*** (2013.01); *A61N 2005/101* (2013.01); *A61N 2005/1009* (2013.01); *A61N 2005/1023* (2013.01); *A61N 2005/1024* (2013.01)

(58) **Field of Classification Search**
CPC A61N 5/1007; A61N 5/1027; A61N 2005/1023; A61N 2005/1009; A61N 2005/101; A61N 2005/1012; A61M 37/0069
USPC 600/1, 8, 7; 128/897–899
See application file for complete search history.

(56) **References Cited**

U.S. PATENT DOCUMENTS

D244,393 S 5/1977 Collica et al.
4,706,652 A 11/1987 Horowitz

(Continued)

FOREIGN PATENT DOCUMENTS

DE 613 528 5/1935
EP 0 906 769 A2 4/1999

(Continued)

OTHER PUBLICATIONS

Office Action dated Apr. 2, 2015; European Patent Application No. 12724426.7; 5 pages.

(Continued)

Primary Examiner — Navin Natnithithadha
Assistant Examiner — Sunita Reddy
(74) *Attorney, Agent, or Firm* — Knobbe, Martens, Olson & Bear LLP

(57) **ABSTRACT**

A device for loading and customizing brachytherapy carriers based on the principles of optimizing a more precise and predictable dosimetry, and adaptable to the geometric challenges of a tumor bed in a real-time setting. The present invention relates to a specialized loading device designed to enable a medical team to create a radionuclide carrier for each patient and tumor reliably, reproducibly and efficiently.
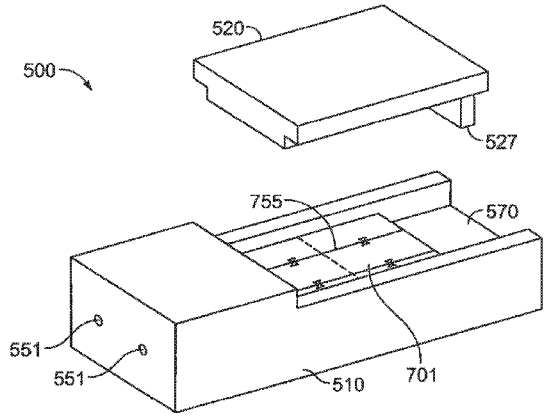
10 Claims, 6 Drawing Sheets