US009408638B2

(12) **United States Patent**
Kroll et al.

(10) **Patent No.: US 9,408,638 B2**
(45) **Date of Patent: Aug. 9, 2016**

(54) **SPINAL CORRECTION SYSTEM ACTUATORS**

(71) Applicant: **K2M, Inc.**, Leesburg, VA (US)

(72) Inventors: **Ryan M. Kroll**, Mount Pleasant, SC (US); **Steven J. Seme**, Savage, MN (US); **Thomas J. Gisel**, Chaska, MN (US); **Mark W. Kroll**, Crystal Bay, MN (US)

(73) Assignee: **K2M, Inc.**, Leesburg, VA (US)

(*) Notice: Subject to any disclaimer, the term of this patent is extended or adjusted under 35 U.S.C. 154(b) by 0 days.

(21) Appl. No.: **15/010,049**

(22) Filed: **Jan. 29, 2016**

(65) **Prior Publication Data**

US 2016/0143669 A1 May 26, 2016

Related U.S. Application Data

(63) Continuation of application No. 14/123,729, filed as application No. PCT/US2012/040493 on Jun. 1, 2012.

(60) Provisional application No. 61/493,117, filed on Jun. 3, 2011.

(51) **Int. Cl.**
A61B 17/70 (2006.01)

(52) **U.S. Cl.**
CPC ***A61B 17/7002*** (2013.01); ***A61B 17/7041*** (2013.01)

(58) **Field of Classification Search**
CPC A61B 17/7002; A61B 17/7014; A61B 17/7016; A61B 17/7041; A61B 17/7053; A61B 17/7064; A61B 17/7083
USPC 242/393–394, 371, 379
See application file for complete search history.

(56) **References Cited**

U.S. PATENT DOCUMENTS

2,774,350	A	12/1956	Cleveland, Jr.
3,242,922	A	3/1966	Thomas
3,352,226	A	11/1967	Nelsen
3,648,691	A	3/1972	Lumb et al.
3,693,616	A	9/1972	Roaf et al.
3,865,105	A	2/1975	Lode
4,024,588	A	5/1977	Janssen et al.
4,078,559	A	3/1978	Nissinen

(Continued)

FOREIGN PATENT DOCUMENTS

DE	2644735	A1	4/1977
DE	2845647	A1	5/1980

(Continued)

OTHER PUBLICATIONS

Berry, James L. et al., A Morphometric Study of Human Lumbar and Selected Thoracic Vertebrae, 12 SPINE 362 (1987).

(Continued)

Primary Examiner — Jacqueline Johanas
(74) *Attorney, Agent, or Firm* — Carter, Deluca, Farrell & Schmidt, LLP

(57) **ABSTRACT**

A spinal correction system for implantation in a patient, the system including a reciprocating adjuster and/or a resistance adjuster coupled to a stabilizing member, for example. The resistance adjuster includes a potential energy drive, a slide unit, and a resistance unit. The reciprocating adjuster includes a piston unit, a transfer unit coupled to the piston unit, and a return mechanism.
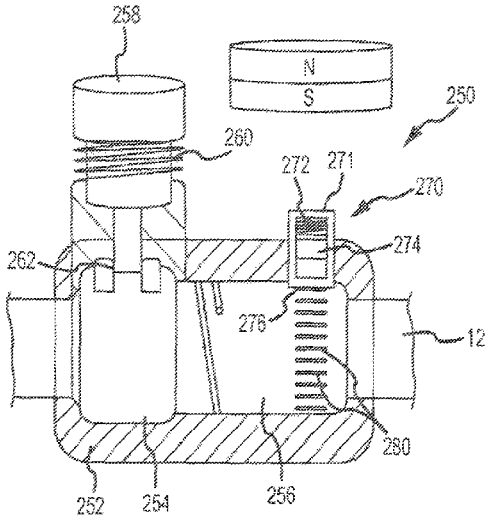
9 Claims, 26 Drawing Sheets