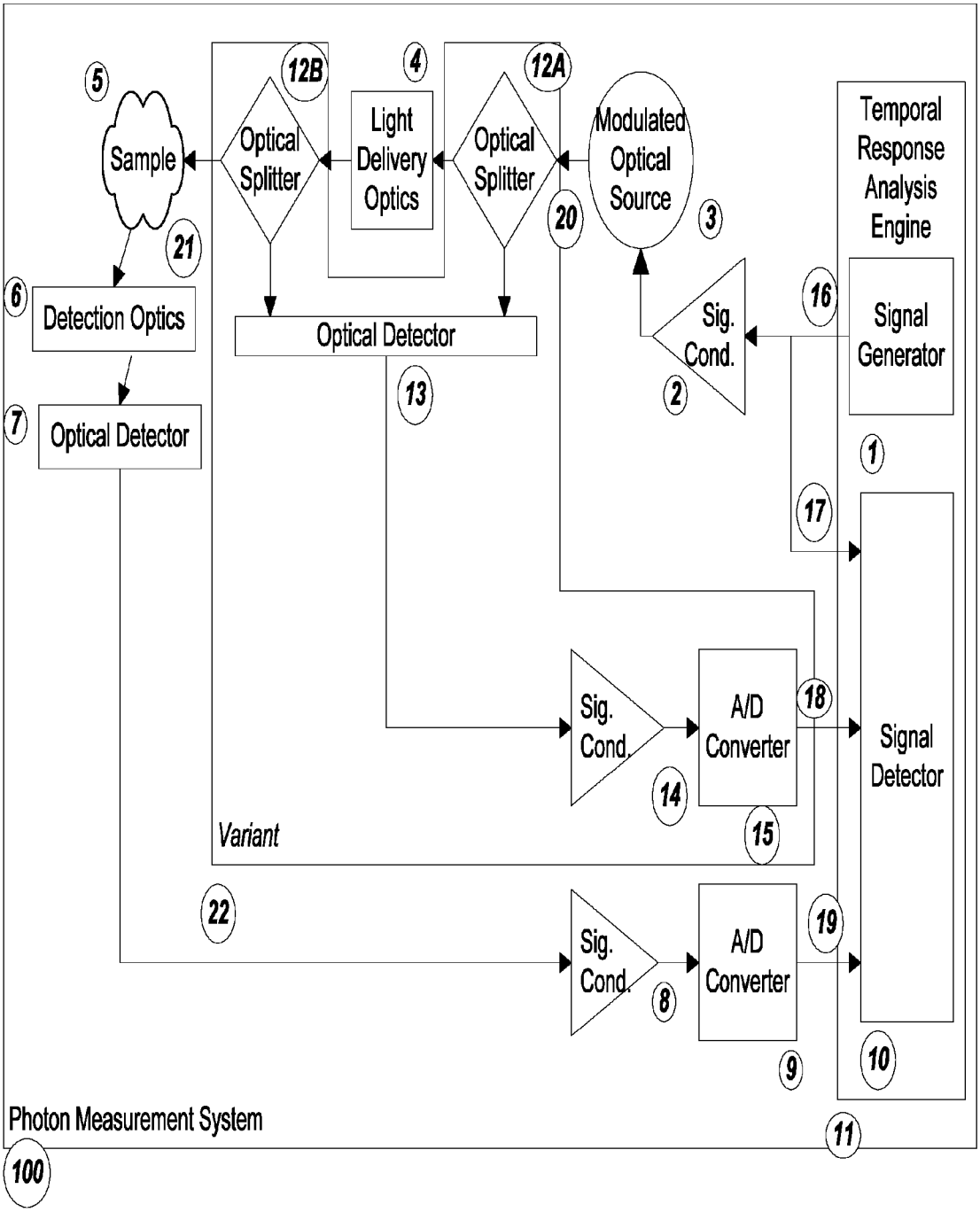
5
Sample
12B
Optical Splitter
4
Light Delivery Optics
12A
Optical Splitter
Modulated Optical Source
3
20
Temporal Response Analysis Engine
21
6
Detection Optics
Optical Detector
16
Sig. Cond.
2
Signal Generator
13
7
Optical Detector
1
17
Sig. Cond.
A/D Converter
18
Signal Detector
14
15
Variant
22
Sig. Cond.
A/D Converter
19
8
9
10
Photon Measurement System
11
100

Fig. 1