Fig.2 (a)

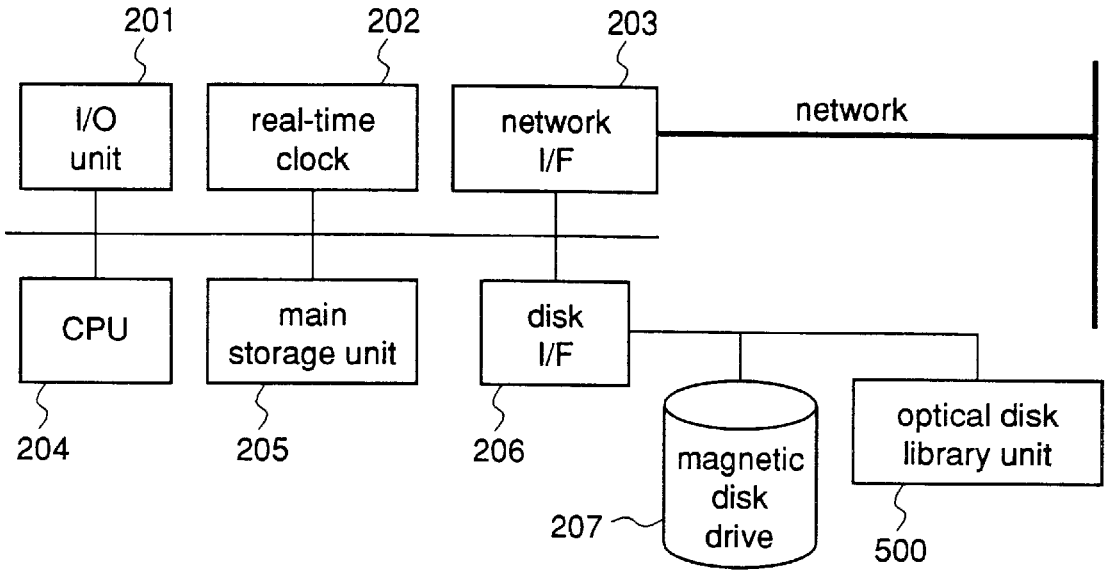
201
202
203
I/O unit
real-time clock
network I/F
network
CPU
main storage unit
disk I/F
204
205
206
magnetic disk drive
optical disk library unit
207
500

Fig.2 (b)

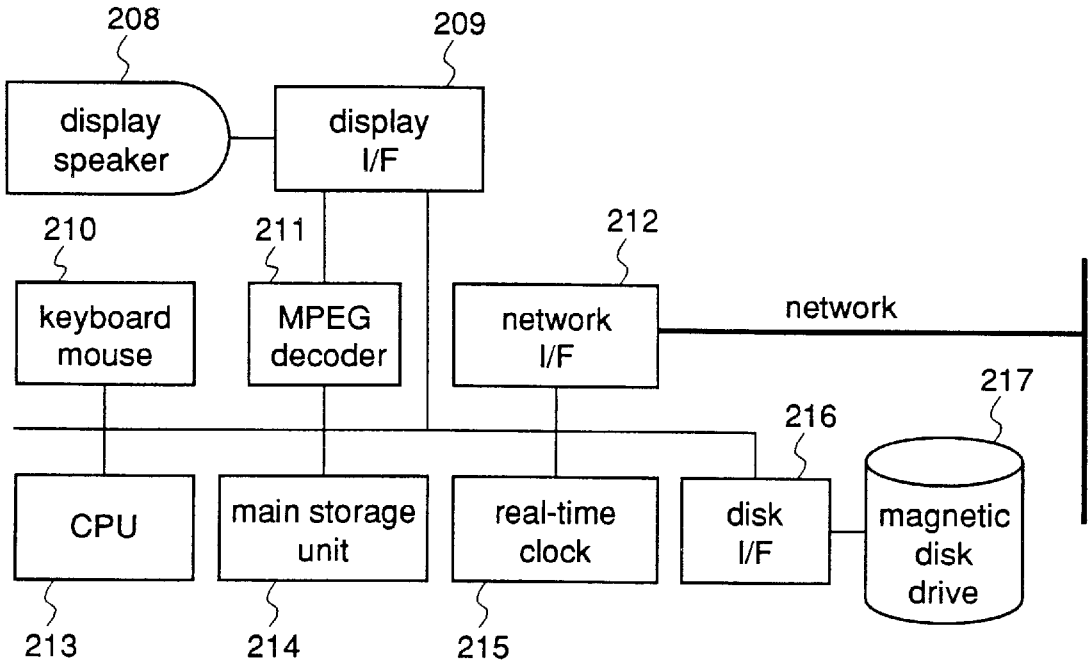
208
209
display speaker
display I/F
210
211
212
keyboard mouse
MPEG decoder
network I/F
network
217
216
CPU
main storage unit
real-time clock
disk I/F
magnetic disk drive
213
214
215