US010004538B2

(12) **United States Patent**
McNab et al.

(10) **Patent No.: US 10,004,538 B2**
(45) **Date of Patent: Jun. 26, 2018**

(54) **SURGICAL INSTRUMENT AND METHOD**

(71) Applicant: **Warsaw Orthopedic, Inc**, Warsaw, IN (US)

(72) Inventors: **Jennifer G. McNab**, Memphis, TN (US); **Nicholas M. Benson**, Cordova, TN (US); **Brian A. Butler**, Atoka, TN (US); **Eric D. Densford**, West Memphis, AR (US); **Christine Joe**, Evanston, IL (US); **Larry T. McBride, Jr.**, Memphis, TN (US)

(73) Assignee: **Warsaw Orthopedic, Inc.**, Warsaw, IN (US)

(*) Notice: Subject to any disclaimer, the term of this patent is extended or adjusted under 35 U.S.C. 154(b) by 0 days. days.

(21) Appl. No.: **15/140,219**

(22) Filed: **Apr. 27, 2016**

(65) **Prior Publication Data**

US 2017/0311986 A1 Nov. 2, 2017

(51) **Int. Cl.**
A61B 17/70 (2006.01)
A61B 17/68 (2006.01)

(52) **U.S. Cl.**
CPC ***A61B 17/7023*** (2013.01); ***A61B 17/708*** (2013.01); ***A61B 17/7082*** (2013.01); *A61B 2017/681* (2013.01)

(58) **Field of Classification Search**
CPC A61B 17/7023
See application file for complete search history.

(56) **References Cited**

U.S. PATENT DOCUMENTS

1,365,532 A * 1/1921 Mountain A61F 2/64 16/340
2,077,844 A * 4/1937 Leighton B62D 17/00 188/197
3,816,854 A * 6/1974 Schlein A61F 2/3804 623/20.12
5,405,347 A * 4/1995 Lee A61B 17/6416 403/103
5,509,328 A * 4/1996 Lai B62K 21/16 280/279
5,643,263 A * 7/1997 Simonson A61B 1/00085 606/264
6,007,536 A * 12/1999 Yue A61B 17/809 606/60
6,238,396 B1 * 5/2001 Lombardo A61B 17/7052 606/251
6,296,644 B1 * 10/2001 Saurat A61B 17/7013 606/256
6,620,164 B2 * 9/2003 Ueyama A61B 17/7002 606/261
6,652,527 B2 * 11/2003 Zucherman A61K 31/37 606/249

(Continued)

Primary Examiner — Ellen C Hammond
Assistant Examiner — Stuart S Bray

(57) **ABSTRACT**

A surgical instrument includes a first arm engageable with a first spinal construct disposed with a first vertebral surface. A second arm is connected with the first arm via a pivot and being engageable with a second spinal construct disposed with a second vertebral surface. The first arm is movable to rotate the first spinal construct relative to the pivot and/or the second arm is movable to rotate the second spinal construct relative to the pivot such that the first vertebral surface is moved relative to the second vertebral surface. Systems and methods of use are disclosed.
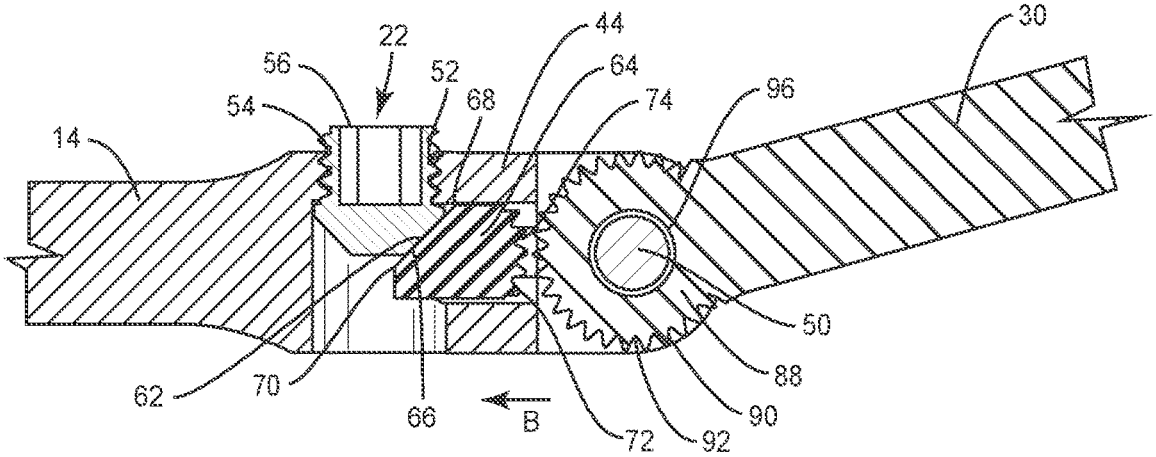
17 Claims, 11 Drawing Sheets