No. 794,637. PATENTED JULY 11, 1905.

R. L. PARK & R. E. JONES.

FLY EXTERMINATOR.

APPLICATION FILED NOV. 13, 1903.

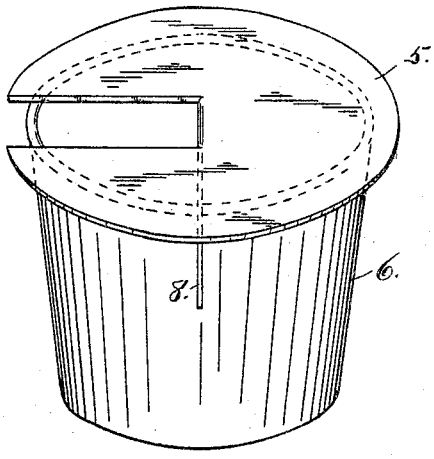

Fig. 1.

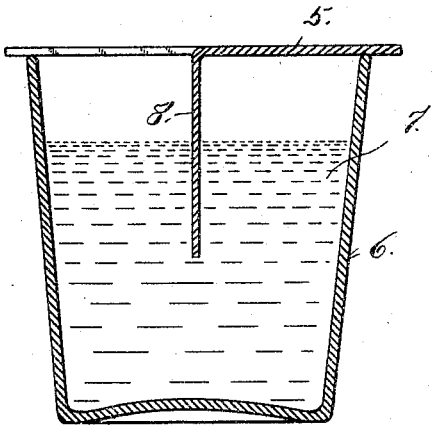

Fig. 2.

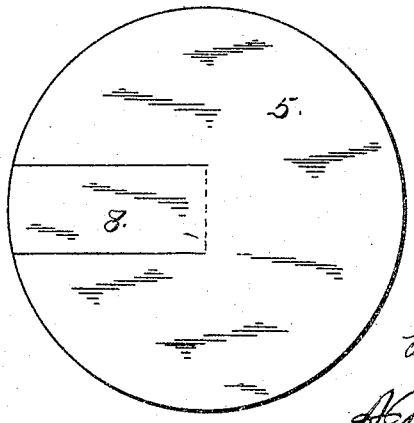

Fig. 3.

Witnesses
Otto E. Hoddick.
Dena Nelson.

R. L. Park.
R. E. Jones.
Inventors
by
A. R. Brier Attorney