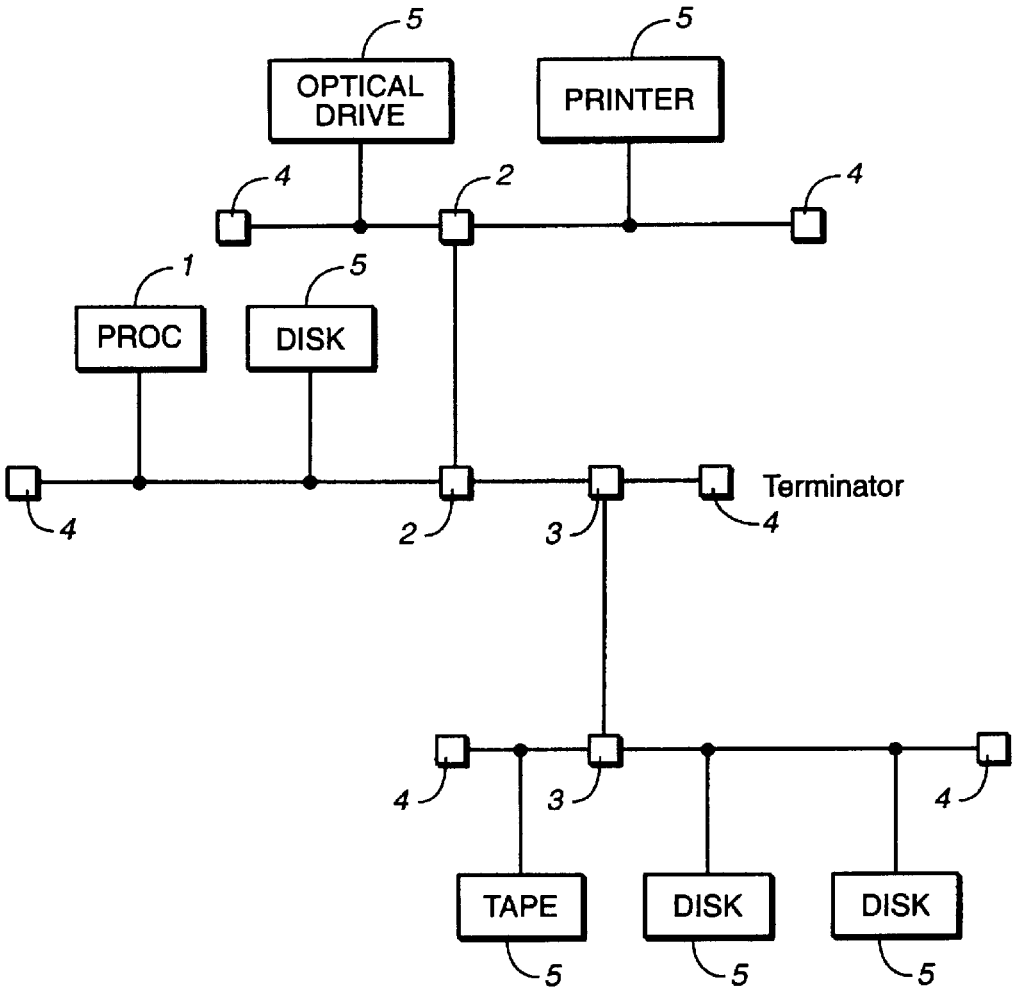
OPTICAL DRIVE
PRINTER
PROC
DISK
Terminator
TAPE
DISK
DISK
1
2
3
4
5

FIG._1