F. VAN GELDEREN.

GLOBE SUPPORT.

APPLICATION FILED APR. 16, 1913.

1,071,537. Patented Aug. 26, 1913.

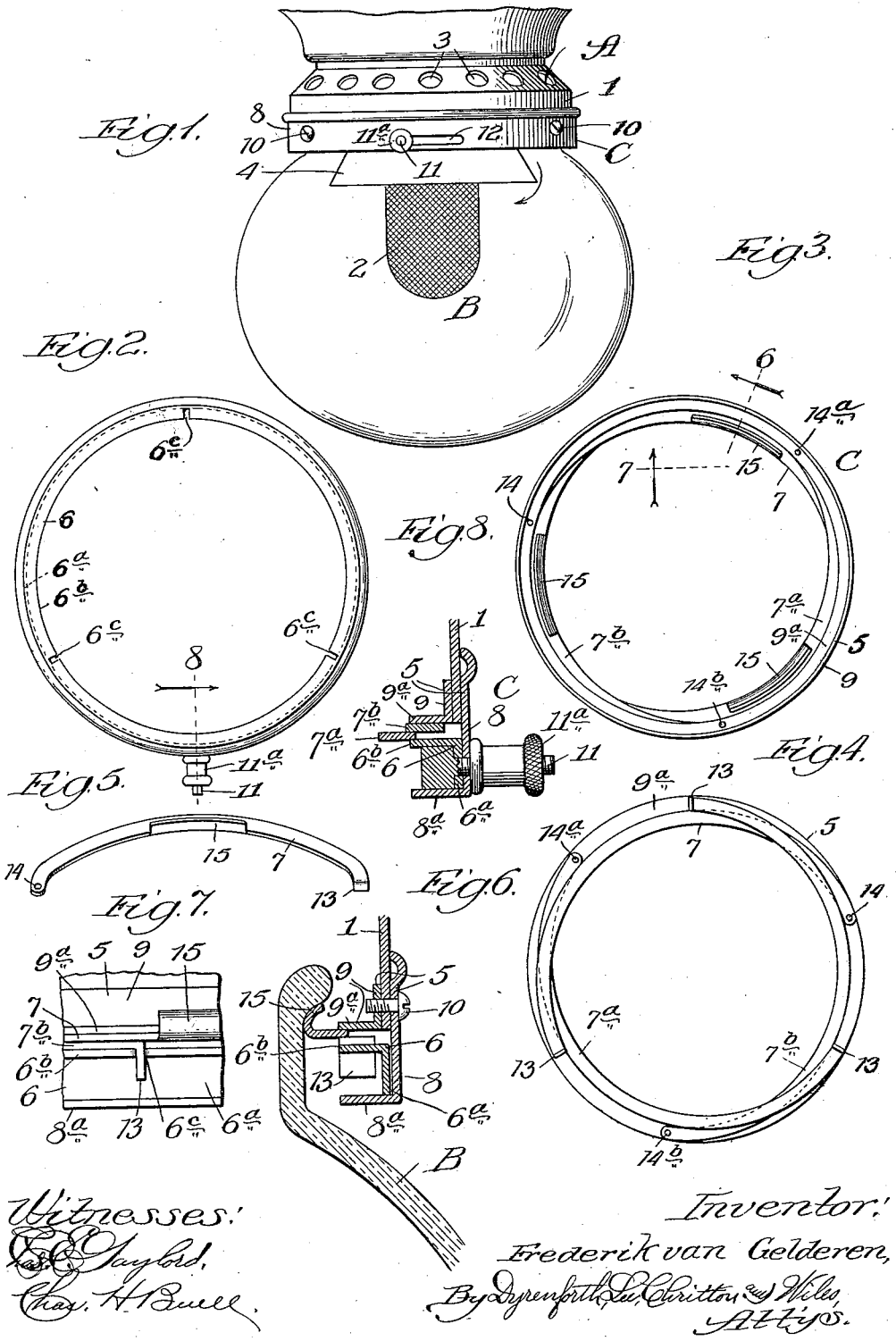

Witnesses:
Chas. C. Gaylord,
Chas. H. Bull.

Inventor:
Frederik van Gelderen,
By Dyrenforth, Lee, Christy, and Wiley,
Att'ys.

COLUMBIA PLANOGRAPH CO., WASHINGTON, D. C.