US008360237B2

(12) **United States Patent**
Weaver et al.

(10) **Patent No.: US 8,360,237 B2**
(45) **Date of Patent: *Jan. 29, 2013**

(54) **APPARATUS FOR PACKAGING AND PRESENTING ROTARY DRILL BITS**

(75) Inventors: **Gary Weaver**, Conroe, TX (US); **Brian Pittel**, Houston, TX (US); **Patsy A. Jenner**, Spring, TX (US); **Jerry R. Middleton**, Alvarado, TX (US); **Steven Petty**, Arp, TX (US); **Russell Voisin**, Houma, LA (US); **Teri Jackson**, Willis, TX (US); **Brian Atkins**, Houston, TX (US); **David Starnes**, Duncan, OK (US)

(73) Assignee: **Halliburton Energy Services, Inc.**, Houston, TX (US)

(*) Notice: Subject to any disclaimer, the term of this patent is extended or adjusted under 35 U.S.C. 154(b) by 0 days.

This patent is subject to a terminal disclaimer.

(21) Appl. No.: **13/189,988**

(22) Filed: **Jul. 25, 2011**

(65) **Prior Publication Data**

US 2012/0018329 A1 Jan. 26, 2012

Related U.S. Application Data

(63) Continuation of application No. 12/441,761, filed as application No. PCT/US2007/078847 on Sep. 19, 2007, now Pat. No. 8,002,112.

(60) Provisional application No. 60/826,313, filed on Sep. 20, 2006.

(51) **Int. Cl.**
B65D 85/28 (2006.01)

(52) **U.S. Cl.** **206/349**; 206/379; 220/772

(58) **Field of Classification Search** 206/349, 206/378–379; 220/4.21, 4.26, 4.27, 8, 772; 175/57, 85

See application file for complete search history.

(56) **References Cited**

U.S. PATENT DOCUMENTS

2,326,414	A *	8/1943	Thompson	220/4.27
2,739,729	A	3/1956	Jonas	
2,927,394	A *	3/1960	Johnson	220/4.21
3,386,617	A	6/1968	Shankland, Sr.	
3,819,040	A *	6/1974	Coons	220/8
4,244,469	A	1/1981	Miner	
4,393,974	A *	7/1983	Levesque	220/4.26
4,495,840	A	1/1985	Freitag et al.	
4,733,789	A	3/1988	Olson	
6,311,789	B1	11/2001	Saxman	
6,536,192	B2	3/2003	King et al.	
7,874,440	B2 *	1/2011	Gnepper	206/581
8,002,112	B2 *	8/2011	Weaver et al.	206/349

OTHER PUBLICATIONS

International Search Report and Written Opinion; PCT/US07/78847; pp. 11, May 22, 2008.

International Preliminary Report on Patentability; PCT/US2007/078847; pp. 10, Apr. 2, 2009.

Examination Report, Application No. GB0904744.0, 2 pages, Dec. 2, 2011.

* cited by examiner

Primary Examiner — Bryon Gehman

(74) *Attorney, Agent, or Firm* — Baker Botts L.L.P.

(57) **ABSTRACT**

A container is provided for packaging, shipping, storing and presenting a rotary drill bit. The container may be used with fixed cutter drill bits or roller cone drill bits. A wide variety of tools and accessory components may be disposed within the container. A bit breaker may also be attached to one end of the container using a bit breaker adapter. Bit breakers for two different sizes of rotary drill bits may be releasably engaged with a container using the same bit breaker adapter.
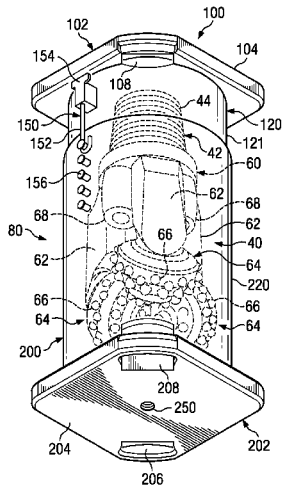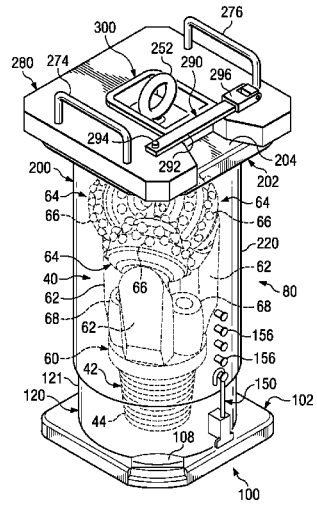
9 Claims, 7 Drawing Sheets