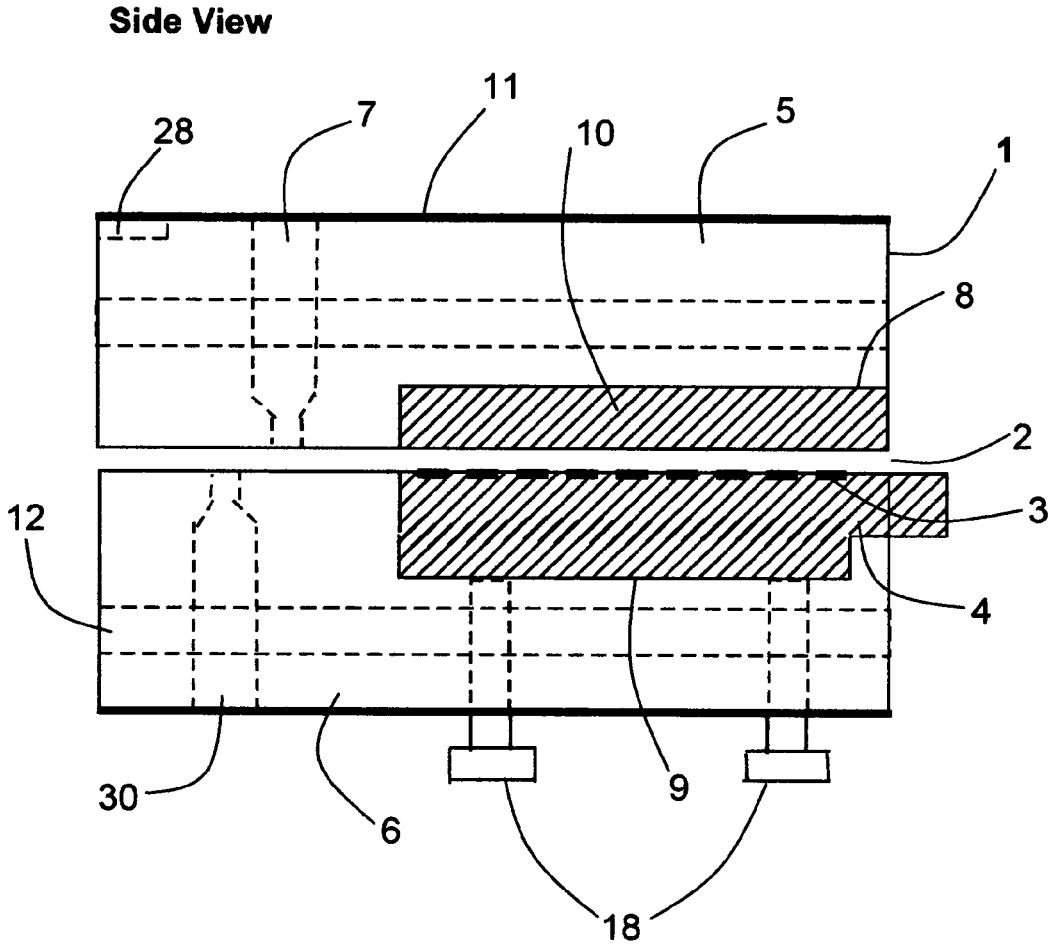

Figure 1a.