March 29, 1966 P. R. LUERTZING 3,243,037

PACKAGE FOR GLASSWARE

Filed March 3, 1965 3 Sheets-Sheet 1

FIG. 1.

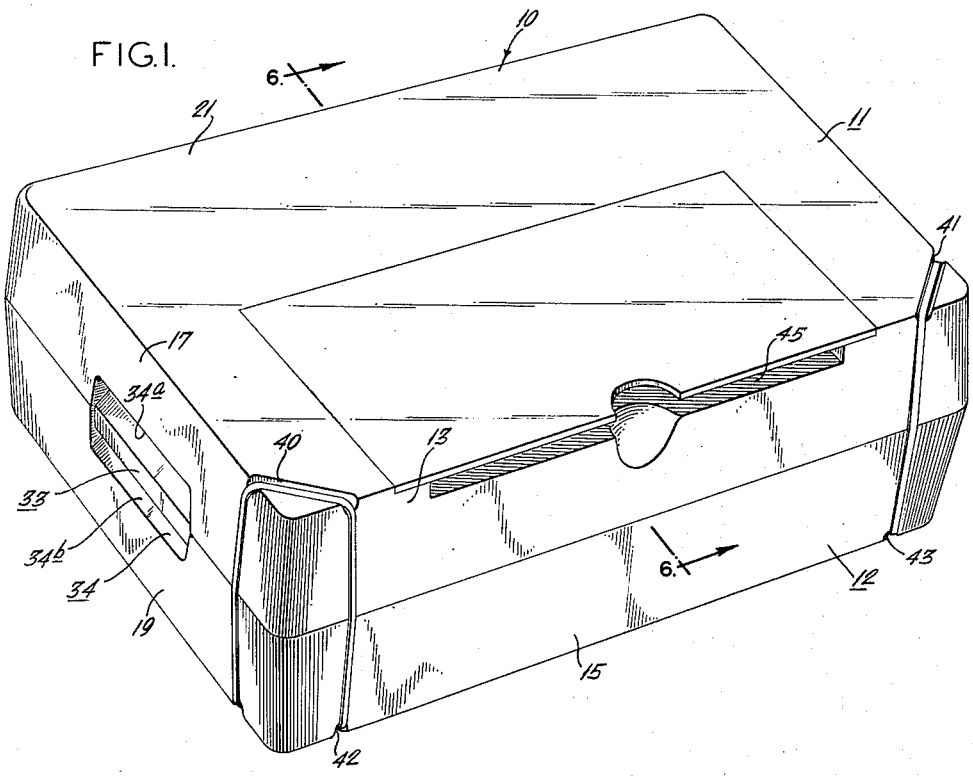

FIG. 6.

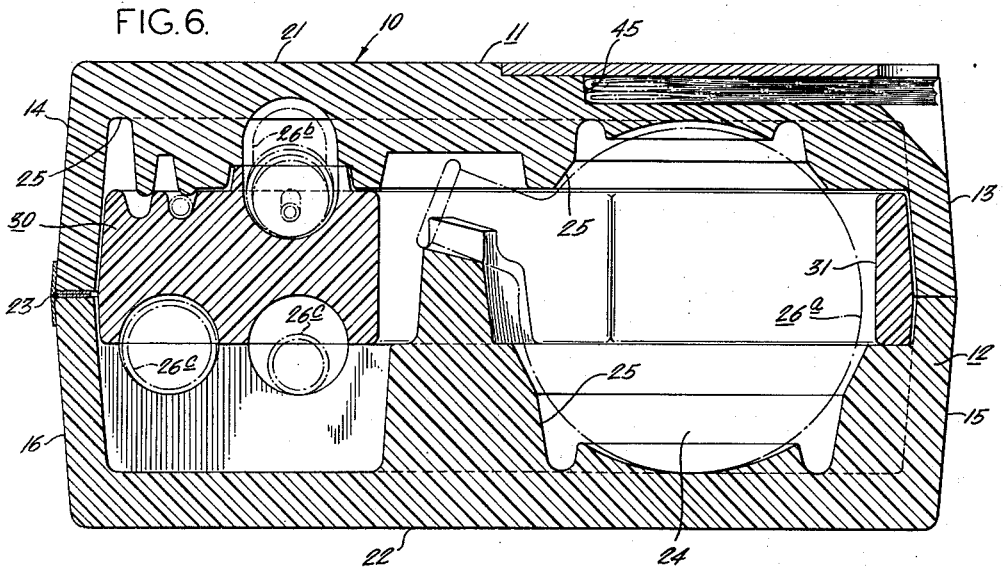

INVENTOR:
PAUL R. LUERTZING
BY Howson & Howson
ATTYS.