United States Patent [19]

Smith et al.

[11] **Patent Number: 4,741,337**

[45] **Date of Patent: May 3, 1988**

[54] **SURGICAL FASTENER MADE FROM GLYCOLIDE-RICH POLYMER BLENDS**

[75] Inventors: **Carl R. Smith**, Bloomingdale; **Mark T. Gaterud**, Annandale; **Dennis D. Jamiolkowski**, Long Valley; **Hugh D. Newman, Jr.**, Chester; **Shalaby W. Shalaby**, Lebanon, all of N.J.

[73] Assignee: **Ethicon, Inc.**, Somerville, N.J.

[21] Appl. No.: **755,888**

[22] Filed: **Jul. 17, 1985**

[51] **Int. Cl.**[4] **A61B 17/04;** A61B 17/08

[52] **U.S. Cl.** ..... **128/334 R;** 128/334 C; 128/325; 128/326; 128/335.5; 525/410; 525/415

[58] **Field of Search** ..... 128/334 C, 334 R, 325, 128/326, 335.5, 92 R, 92 BB, 346, 337; 227/DIG. 1; 525/410, 415; 528/354; 604/891

[56] **References Cited**

U.S. PATENT DOCUMENTS

3,839,297	10/1974	Wasserman et al.	260/78.3 R
3,892,821	7/1975	Koleske et al.	260/860
4,137,921	2/1979	Okuzumi et al.	128/335.5
4,214,586	7/1980	Mericle	128/334 R
4,402,445	9/1983	Green	128/334 C
4,523,591	6/1985	Kaplan et al.	128/334 R
4,532,926	8/1985	O'Holla	128/334 C
4,534,350	8/1985	Golden et al.	128/334 C
4,579,118	4/1986	Failla	128/325
4,605,730	8/1986	Shalaby et al.	128/335.5

Primary Examiner—Richard J. Apley
Assistant Examiner—Paul Prebilic
Attorney, Agent, or Firm—Charles J. Metz

[57] **ABSTRACT**

A surgical fastener is made from a glycolide-rich blend of polymers.
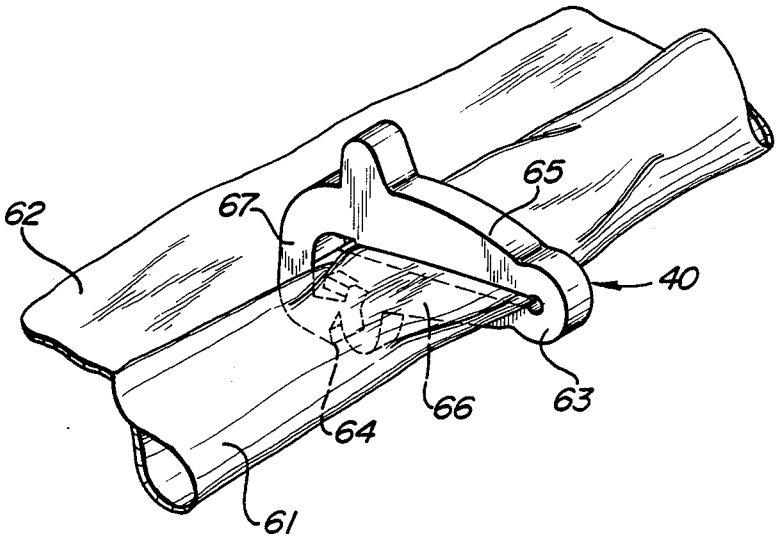
8 Claims, 4 Drawing Sheets