May 29, 1962 J. F. MOTSON 3,037,137

FLEXIBLE LIGHT SOURCE

Filed May 18, 1959

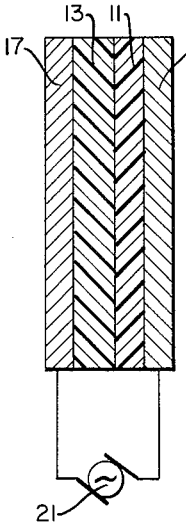

FIG. 1

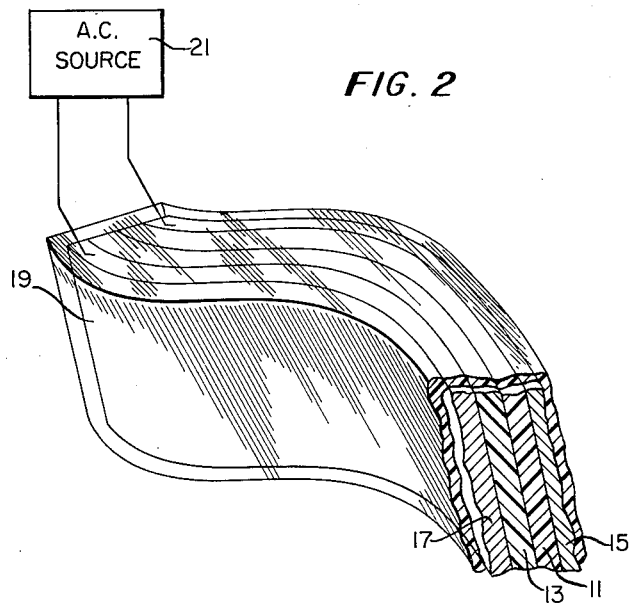

FIG. 2

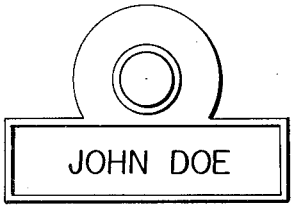

FIG. 4

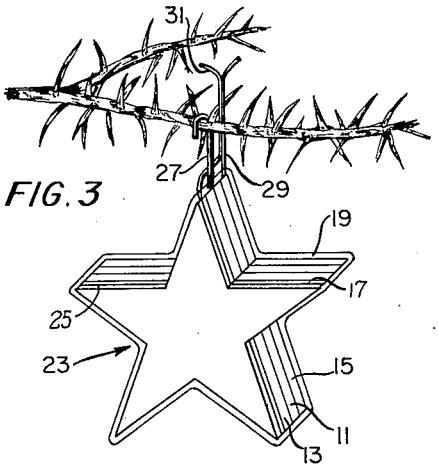

FIG. 3

FIG. 5

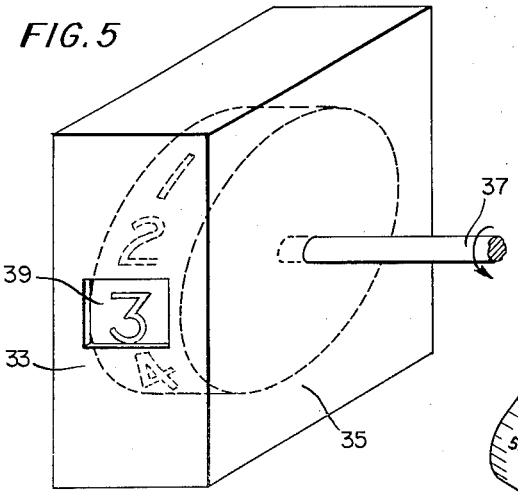

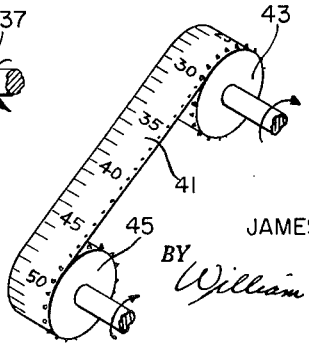

FIG. 6

INVENTOR.
JAMES F. MOTSON
BY William E. Cleaver
AGENT