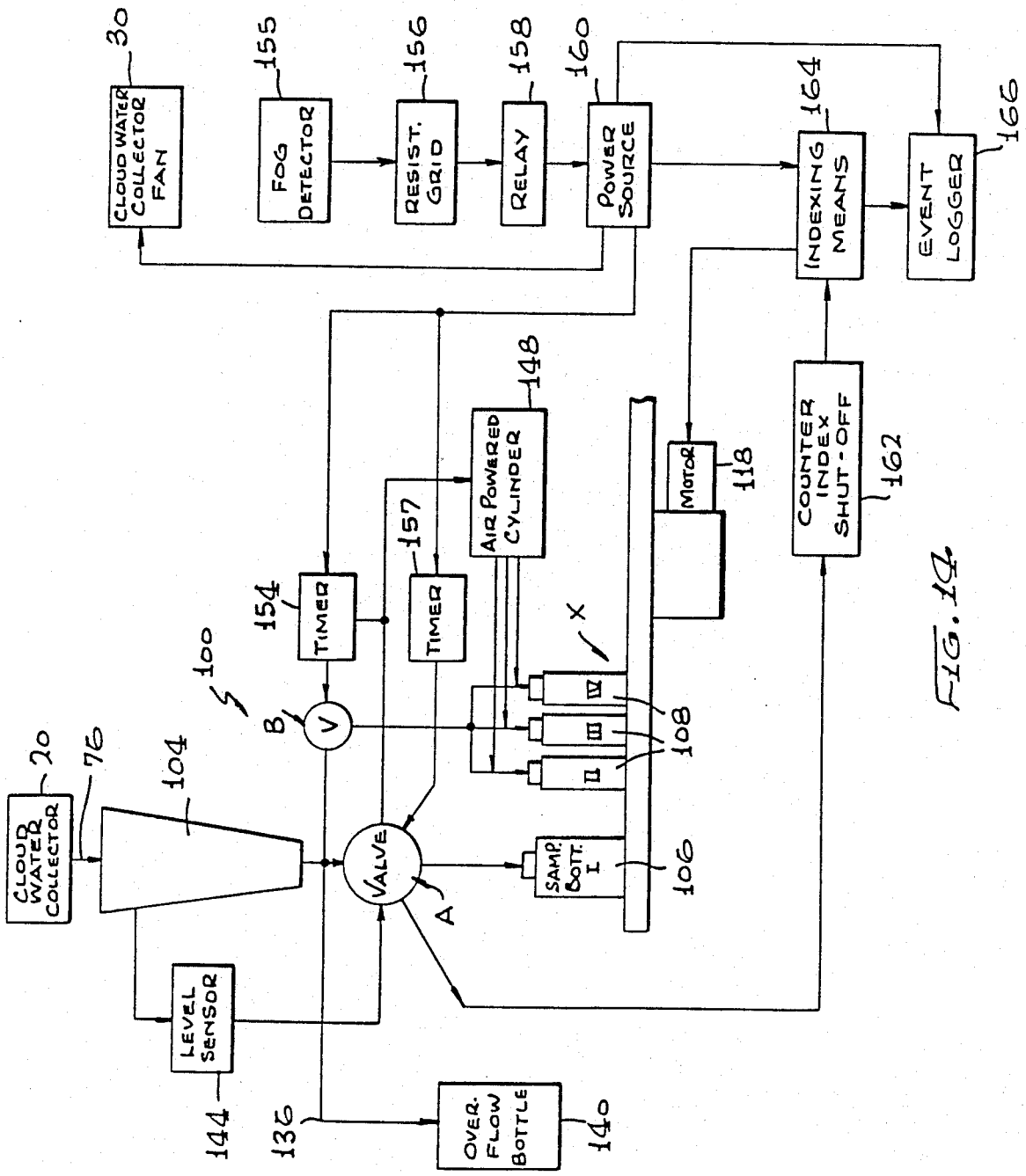
CLOUD WATER COLLECTOR FAN
30
FOG DETECTOR
155
RESIST. GRID
156
RELAY
158
POWER SOURCE
160
INDEXING MEANS
164
EVENT LOGGER
166
AIR POWERED CYLINDER
148
MOTOR
118
COUNTER INDEX SHUT-OFF
162
TIMER
154
TIMER
157
100
B
V
X
IV
III
II
108
CLOUD WATER COLLECTOR
20
76
104
VALVE
A
SAMP. BOTT. I
106
LEVEL SENSOR
144
136
OVER. FLOW BOTTLE
140

FIG. 14

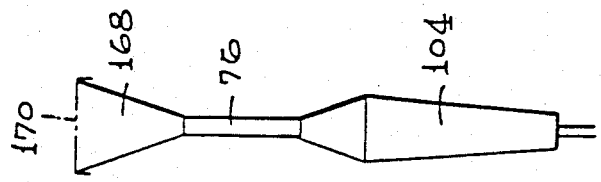
170
168
76
104

FIG. 15