US008031037B2

(12) **United States Patent**
Sherrer et al.

(10) **Patent No.: US 8,031,037 B2**
(45) **Date of Patent: *Oct. 4, 2011**

(54) **THREE-DIMENSIONAL MICROSTRUCTURES AND METHODS OF FORMATION THEREOF**

(75) Inventors: **David W. Sherrer**, Radford, VA (US); **William D. Houck**, Blacksburg, VA (US)

(73) Assignee: **Nuvotronics, LLC**, Redford, VA (US)

(*) Notice: Subject to any disclaimer, the term of this patent is extended or adjusted under 35 U.S.C. 154(b) by 0 days.

This patent is subject to a terminal disclaimer.

(21) Appl. No.: **12/608,870**

(22) Filed: **Oct. 29, 2009**

(65) **Prior Publication Data**

US 2010/0109819 A1 May 6, 2010

(51) **Int. Cl.**
H01P 3/06 (2006.01)

(52) **U.S. Cl.** **333/244**; 29/828

(58) **Field of Classification Search** 333/244, 333/243, 238; 174/28; 29/828
See application file for complete search history.

(56) **References Cited**

U.S. PATENT DOCUMENTS

2,997,519	A	8/1961	Hines et al.	
3,560,896	A	2/1971	Essinger	
3,760,306	A	9/1973	Spinner et al.	
3,789,129	A	1/1974	Ditscheid	
4,365,222	A	12/1982	Lampert et al.	
4,414,424	A	11/1983	Mizoguchi et al.	
4,437,074	A	3/1984	Cohen et al.	
4,521,755	A	6/1985	Carlson et al.	
4,673,904	A	6/1987	Landis	
4,700,159	A	10/1987	Jones, III	
5,072,201	A	12/1991	Devaux et al.	
5,381,157	A	1/1995	Shiga	
5,406,235	A	4/1995	Hayashi et al.	
5,712,607	A	1/1998	Dittmer	
5,793,272	A	8/1998	Burghartz et al.	
6,008,102	A	12/1999	Alford et al.	
6,466,112	B1	10/2002	Kwon et al.	
6,535,088	B1	3/2003	Sherman et al.	
7,012,489	B2	3/2006	Sherrer et al.	
7,148,772	B2	12/2006	Sherrer et al.	
7,649,432	B2 *	1/2010	Sherrer et al.	333/244
7,656,256	B2 *	2/2010	Houck et al.	333/244
2002/0075104	A1	6/2002	Kwon et al.	
2003/0222738	A1	12/2003	Brown et al.	
2004/0263290	A1	12/2004	Sherrer et al.	

FOREIGN PATENT DOCUMENTS

EP	0845831	6/1998
EP	0911903	4/1999
JP	6085510	3/1994
WO	WO00/07218	2/2000
WO	WO00/39854	7/2000
WO	WO02/080279	10/2002

* cited by examiner

Primary Examiner — Benny Lee
(74) *Attorney, Agent, or Firm* — Sherr & Vaughn, PLLC

(57) **ABSTRACT**

Provided are three-dimensional microstructures and their methods of formation. The microstructures are formed by a sequential build process and include microstructural elements which are affixed to one another. The microstructures find use, for example, in coaxial transmission lines for electromagnetic energy.
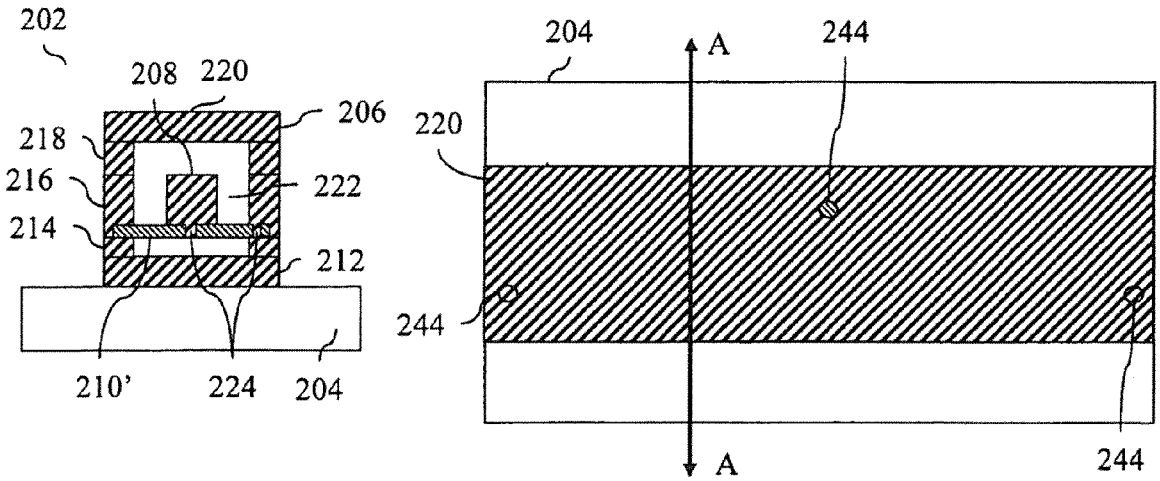
23 Claims, 9 Drawing Sheets