United States Patent [19]

Choyce

[11] **4,315,337**

[45] **Feb. 16, 1982**

[54] **AUTOCLAVABLE ANTERIOR CHAMBER IMPLANT**

[76] Inventor: **David P. Choyce,** 9 Drake Rd., Westcliffe-on-Sea, Essex SSO 8LR, England

[21] Appl. No.: **171,889**

[22] Filed: **Jul. 24, 1980**

[30] **Foreign Application Priority Data**

Jul. 26, 1979 [GB] United Kingdom 26094/79
Mar. 25, 1980 [GB] United Kingdom 10045/80

[51] **Int. Cl.**[3] **A61F 1/16;** A61F 1/24
[52] **U.S. Cl.** **3/13**
[58] **Field of Search** 3/13, 1

[56] **References Cited**

U.S. PATENT DOCUMENTS

3,480,971	12/1969	Smith	3/13
3,711,870	1/1973	Deitrick	3/13
4,028,082	6/1977	Krohn et al.	3/13
4,073,014	2/1978	Poler	3/13
4,080,709	3/1978	Poler	3/13
4,122,556	10/1978	Poler	3/13
4,164,794	8/1979	Spector et al.	3/1 X
4,249,271	2/1981	Poler	3/13

OTHER PUBLICATIONS

"The Choyce Mark VIII and Mark IX Anterior Chamber Implants", by D. P. Choyce, Am. Intr-Ocular Implant Soc. J., vol. V, Jul. 1979, (Presented at the U.S. Intraocular Lens Symposium in Los Angeles, Apr. 1979), pp. 217-221.

The Rayner Choyce Mark VIII Anterior Chamber Implant, Rayner & Keeler Limited, Catalogue No. 469, (3 pages).

Primary Examiner—Ronald L. Frinks
Attorney, Agent, or Firm—Lewis Messulam

[57] **ABSTRACT**

The invention relates to anterior chamber implants of the type having a haptic with feet resting on the anterior surface of the iris. To enable the implant to be autoclaved, the optic is made of glass and the haptic is separately formed from an autoclavable inert material. Titanium and a polyethersulphone thermoplastic material are disclosed as suitable materials for the haptic.
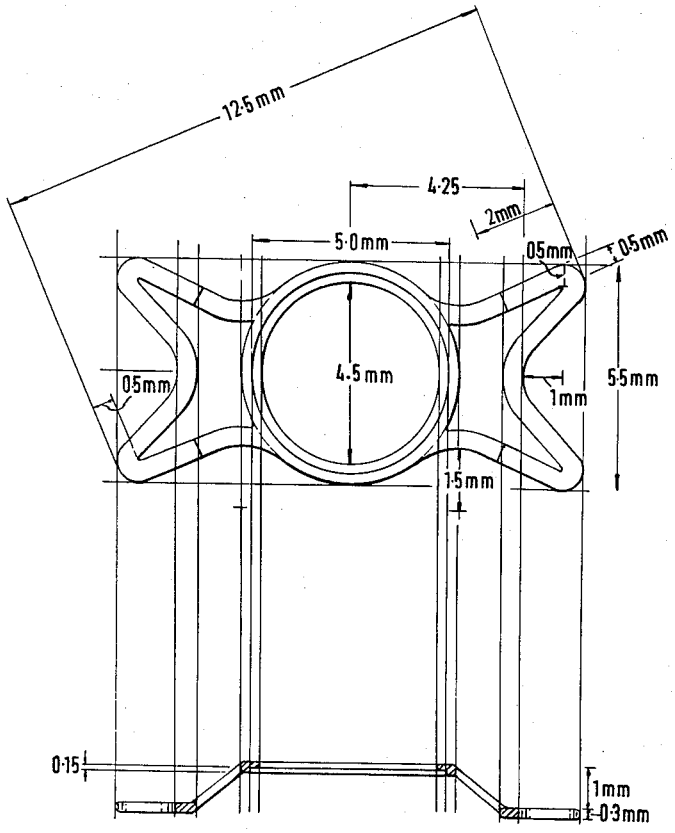
1 Claim, 3 Drawing Figures