US009410837B2

(12) **United States Patent**
Brugger

(10) **Patent No.: US 9,410,837 B2**
(45) **Date of Patent: Aug. 9, 2016**

(54) **DISPENSER**

(71) Applicant: **Gerhard Brugger**, Pflach (AT)

(72) Inventor: **Gerhard Brugger**, Pflach (AT)

(*) Notice: Subject to any disclaimer, the term of this patent is extended or adjusted under 35 U.S.C. 154(b) by 0 days.

(21) Appl. No.: **13/936,168**

(22) Filed: **Jul. 6, 2013**

(65) **Prior Publication Data**

US 2014/0054317 A1 Feb. 27, 2014

(30) **Foreign Application Priority Data**

Jul. 6, 2012 (DE) ..... 20 2012 006 466 U

(51) **Int. Cl.**

B05B 11/00	(2006.01)
G01F 13/00	(2006.01)
B65D 83/52	(2006.01)
B65D 83/68	(2006.01)

(52) **U.S. Cl.**

CPC ***G01F 13/00*** (2013.01); ***B05B 11/3015*** (2013.01); ***B05B 11/3083*** (2013.01); ***B05B 11/3084*** (2013.01); ***B65D 83/525*** (2013.01); ***B65D 83/68*** (2013.01); *B05B 11/0037* (2013.01); *B05B 11/0064* (2013.01); *B05B 11/3004* (2013.01); *B05B 11/3052* (2013.01)

(58) **Field of Classification Search**

CPC B05B 11/3095; B05B 11/3083; B05B 11/3084

USPC 222/135, 144.5, 309, 386, 137, 145.7

See application file for complete search history.

(56) **References Cited**

U.S. PATENT DOCUMENTS

5,169,029	A *	12/1992	Behar et al.	222/1
6,083,528	A *	7/2000	Elliesen	A61K 31/57 221/206
6,464,107	B1 *	10/2002	Brugger	222/134
8,684,200	B2 *	4/2014	Kountotsis	215/6
8,807,399	B2 *	8/2014	Ritzenhoff et al.	222/309
2012/0298694	A1 *	11/2012	Holzmann	222/135
2013/0299514	A1 *	11/2013	Holzmann	222/134

FOREIGN PATENT DOCUMENTS

WO WO 2011047882 A1 * 4/2011

* cited by examiner

Primary Examiner — Paul R Durand
Assistant Examiner — Charles P Cheyney
(74) *Attorney, Agent, or Firm* — Venable LLP; Michele V. Frank

(57) **ABSTRACT**

A dispenser for dispensing at least two components simultaneously uses ramp shaped wedge members to adjust the ratio of the components being dispensed. The components to be dispensed are disposed in separate containers each forming or connected to a pump. The ramp of the wedge members controls the stroke of the pump.
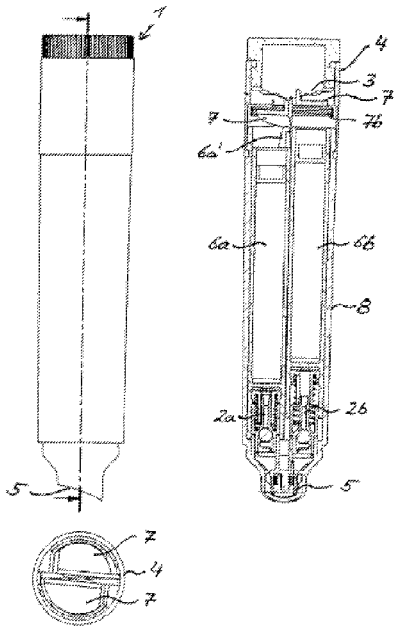
15 Claims, 4 Drawing Sheets