US009410737B2

(12) **United States Patent**
Mak et al.

(10) **Patent No.: US 9,410,737 B2**
(45) **Date of Patent: Aug. 9, 2016**

(54) **NGL RECOVERY METHODS AND CONFIGURATIONS**

(75) Inventors: **John Mak**, Santa Ana, CA (US); **Richard B. Nielsen**, Laguna Niguel, CA (US); **Curt Graham**, Mission Viejo, CA (US)

(73) Assignee: **Fluor Corporation**, Sugar Land, TX (US)

(*) Notice: Subject to any disclaimer, the term of this patent is extended or adjusted under 35 U.S.C. 154(b) by 1771 days.

(21) Appl. No.: **11/917,392**

(22) PCT Filed: **Jul. 20, 2006**

(86) PCT No.: **PCT/US2006/028471**

§ 371 (c)(1), (2), (4) Date: **Oct. 13, 2009**

(87) PCT Pub. No.: **WO2007/014069**

PCT Pub. Date: **Feb. 1, 2007**

(65) **Prior Publication Data**

US 2010/0043488 A1 Feb. 25, 2010

Related U.S. Application Data

(60) Provisional application No. 60/702,516, filed on Jul. 25, 2005.

(51) **Int. Cl.**
F25J 3/00 (2006.01)
F25J 3/02 (2006.01)

(52) **U.S. Cl.**
CPC ..... ***F25J 3/0209*** (2013.01); ***F25J 3/0233*** (2013.01); ***F25J 3/0238*** (2013.01); *F25J 2200/02* (2013.01); *F25J 2200/70* (2013.01); *F25J 2200/76* (2013.01); *F25J 2205/04* (2013.01); *F25J 2210/06* (2013.01); *F25J 2215/60* (2013.01); *F25J 2220/66* (2013.01); (Continued)

(58) **Field of Classification Search**
CPC F25J 3/0209; F25J 3/0233; F25J 3/0238; F25J 2200/02; F25J 2200/70; F25J 2200/76; F25J 2210/60; F25J 2205/04; F25J 2210/06; F25J 2240/02; F25J 2245/02
USPC 62/618–622, 625, 628, 630–632, 637
See application file for complete search history.

(56) **References Cited**

U.S. PATENT DOCUMENTS

3,355,901 A * 12/1967 Angerhofer 62/656
3,595,782 A * 7/1971 Bucklin et al. 208/340
3,793,157 A * 2/1974 Hobbs et al. 203/2

(Continued)

FOREIGN PATENT DOCUMENTS

WO 2005/045338 A1 5/2005

Primary Examiner — Keith Raymond
(74) *Attorney, Agent, or Firm* — Conley Rose, P.C.; Kristin Jordan Harkins

(57) **ABSTRACT**

Contemplated NGL plants include a feed gas bypass circuit through which a portion of the feed gas is provided downstream to a vapor portion of the feed gas to thereby increase turbo expander inlet temperature and demethanizer temperature. Contemplated configurations are especially advantageous for feed gases with relatively high carbon dioxide content as they entirely avoid carbon dioxide freezing in the demethanizer, provide additional power production by the turboexpander, and recover C2+ components to levels of at least 80% while achieving a low carbon dioxide content in the NGL product.
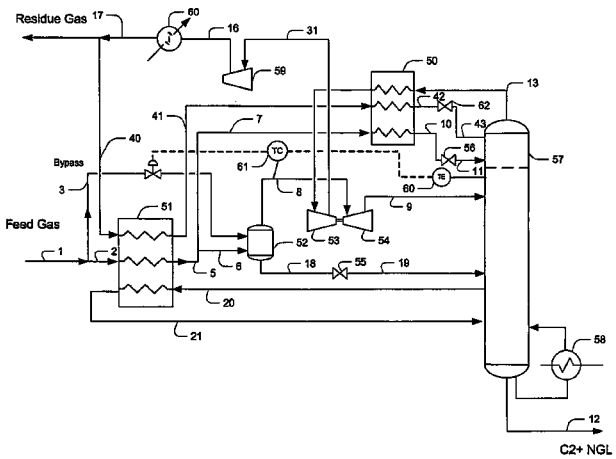
20 Claims, 4 Drawing Sheets