US009409737B2

(12) **United States Patent**
Vantrease

(10) **Patent No.: US 9,409,737 B2**
(45) **Date of Patent: Aug. 9, 2016**

(54) **ENDLESS CLIP-STRIP FEED SPLICER**

(71) Applicant: **Joshua D. Vantrease**, Selah, WA (US)

(72) Inventor: **Joshua D. Vantrease**, Selah, WA (US)

(*) Notice: Subject to any disclaimer, the term of this patent is extended or adjusted under 35 U.S.C. 154(b) by 467 days.

(21) Appl. No.: **13/815,903**

(22) Filed: **Mar. 15, 2013**

(65) **Prior Publication Data**

US 2014/0252155 A1 Sep. 11, 2014

Related U.S. Application Data

(63) Continuation-in-part of application No. 29/447,985, filed on Mar. 8, 2013, now Pat. No. Des. 707,553.

(51) **Int. Cl.**
B65H 19/18 (2006.01)

(52) **U.S. Cl.**
CPC ***B65H 19/1868*** (2013.01); ***B65H 19/1831*** (2013.01); *B65H 2301/41524* (2013.01); *B65H 2301/41525* (2013.01); *B65H 2301/4621* (2013.01); *B65H 2404/147* (2013.01); *B65H 2701/11332* (2013.01); *B65H 2701/191* (2013.01)

(58) **Field of Classification Search**
USPC 242/555, 551, 554, 554.5, 554.6, 555.3, 242/555.1, 555.2, 556, 558, 560, 560.2
See application file for complete search history.

(56) **References Cited**

U.S. PATENT DOCUMENTS

2,963,234	A *	12/1960	Chase et al.	242/421.7
3,164,249	A	1/1965	Paxton	
3,164,250	A	1/1965	Paxton	
3,270,874	A	9/1966	Hilton	
3,983,681	A *	10/1976	Britt et al.	53/76
4,026,413	A	5/1977	Britt et al.	
4,333,566	A	6/1982	Holmes	
4,341,303	A	7/1982	Britt	
4,361,935	A	12/1982	Paxton	
D299,434	S	1/1989	Burford	
4,911,293	A	3/1990	Holmes	
6,228,205	B1 *	5/2001	Rhodes et al.	156/304.3
6,792,987	B2 *	9/2004	Monroe	156/351
6,841,020	B2 *	1/2005	Hebels et al.	156/157
D539,140	S	3/2007	Irwin	
7,596,928	B2 *	10/2009	Irwin	53/417
8,163,118	B2	4/2012	Irwin et al.	
8,261,513	B2 *	9/2012	Irwin	53/417
2004/0094451	A1 *	5/2004	Saho	206/714
2007/0278341	A1 *	12/2007	Tsurunaga et al.	242/554.2
2008/0230646	A1 *	9/2008	Morelli et al.	242/555.6
2010/0264248	A1 *	10/2010	Butterworth	242/552

* cited by examiner

Primary Examiner — Emmanuel M Marcelo
Assistant Examiner — Justin Stefanon
(74) *Attorney, Agent, or Firm* — Svendsen Legal, LLC.

(57) **ABSTRACT**

A splicer machine for feeding strips of closures or clips. The clips formed of flat plastic material, and for receiving portions of flexible bags. More specifically, the automated handling of strips of such clips, where strips of the clips are held together by interlocking portions of the clips.
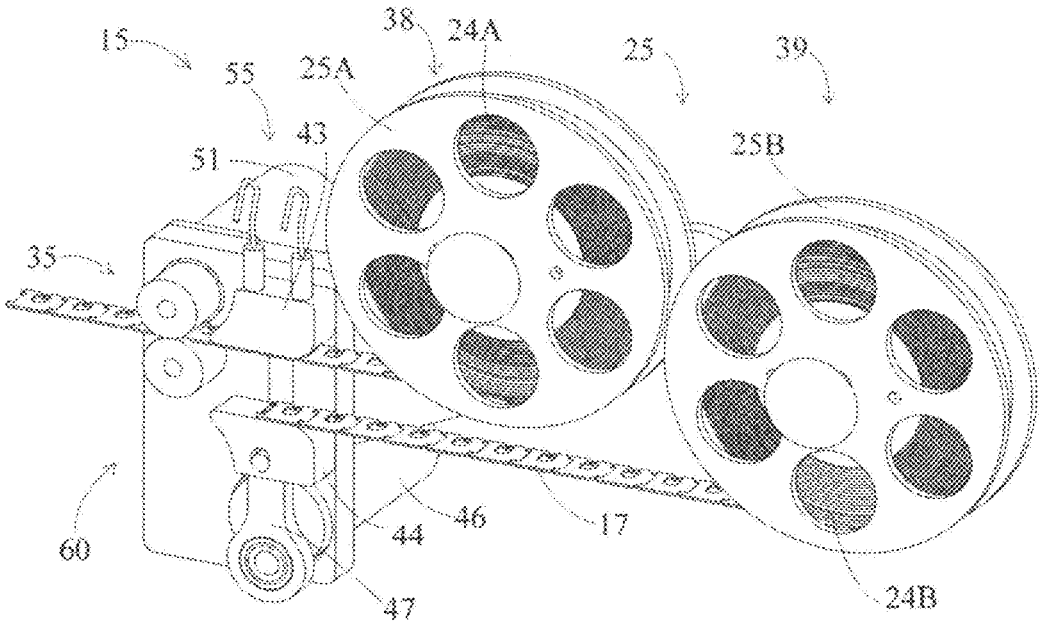
17 Claims, 7 Drawing Sheets