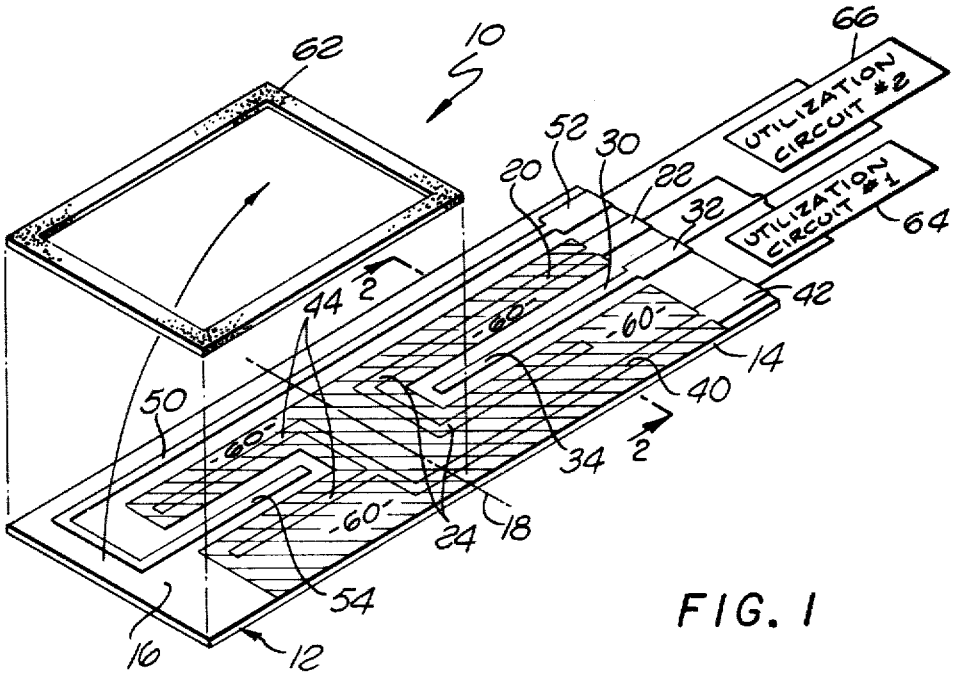
62
10
66
UTILIZATION CIRCUIT #2
UTILIZATION CIRCUIT #1
52
30
20
22
32
64
42
44
2
60
14
40
50
34
2
24
18
54
16
12

FIG. 1

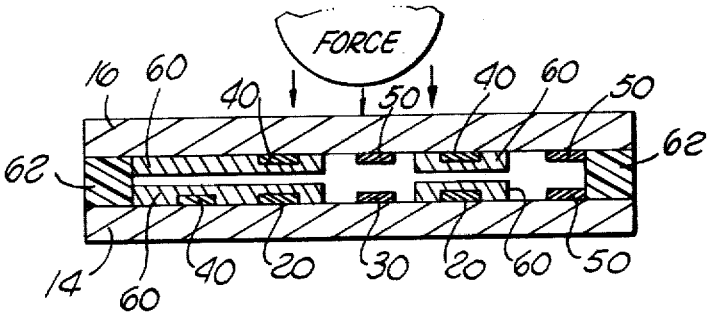
FORCE
16
60
40
50
40
60
50
62
62
14
60
40
20
30
20
60
50

FIG. 2