US006599436B1

(12) **United States Patent**
Matzke et al.

(10) **Patent No.: US 6,599,436 B1**
(45) **Date of Patent: Jul. 29, 2003**

(54) **FORMATION OF INTERCONNECTIONS TO MICROFLUIDIC DEVICES**

(75) Inventors: **Carolyn M. Matzke**, Los Lunas, NM (US); **Carol I. H. Ashby**, Edgewood, NM (US); **Leonardo Griego**, Tijeras, NM (US)

(73) Assignee: **Sandia Corporation**, Albuquerque, NM (US)

(*) Notice: Subject to any disclaimer, the term of this patent is extended or adjusted under 35 U.S.C. 154(b) by 102 days.

(21) Appl. No.: **10/016,956**

(22) Filed: **Dec. 6, 2001**

(51) **Int. Cl.**[7] **H01L 21/00**; B44C 1/22; C03C 15/00

(52) **U.S. Cl.** **216/24**; 216/2; 216/27; 216/33; 216/41; 438/745; 438/753; 346/140.1; 385/83

(58) **Field of Search** 216/2, 24, 27, 216/33, 41, 97, 99, 100; 438/745, 753, 754, 756; 346/140.1; 385/83

(56) **References Cited**

U.S. PATENT DOCUMENTS

5,501,893 A		3/1996	Laermer	428/161
5,989,445 A	*	11/1999	Wise et al.	438/753 X
6,096,656 A		8/2000	Matzke	438/702

* cited by examiner

Primary Examiner—William A. Powell
(74) *Attorney, Agent, or Firm*—John P. Hohimer

(57) **ABSTRACT**

A method is disclosed to form external interconnections to a microfluidic device for coupling of a fluid or light or both into a microchannel of the device. This method can be used to form optical or fluidic interconnections to microchannels previously formed on a substrate, or to form both the interconnections and microchannels during the same process steps. The optical and fluidic interconnections are formed parallel to the plane of the substrate, and are fluid tight.
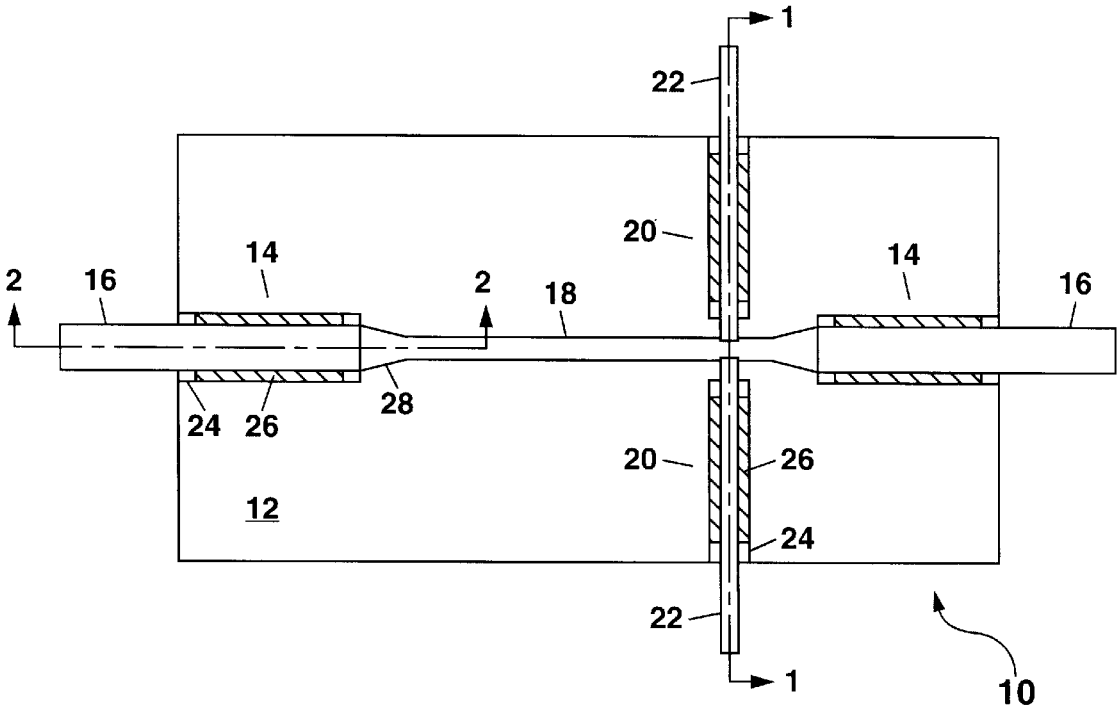
38 Claims, 5 Drawing Sheets