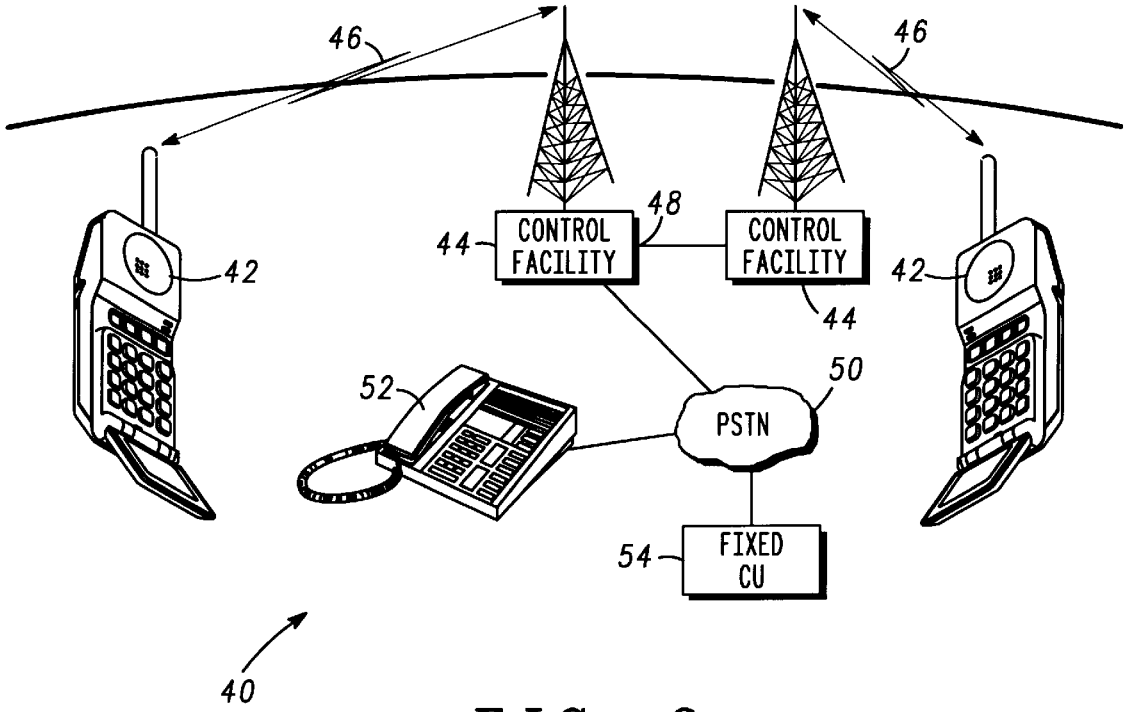
46
46
42
42
44
CONTROL FACILITY
48
CONTROL FACILITY
44
52
50
PSTN
54
FIXED CU
40

FIG. 2

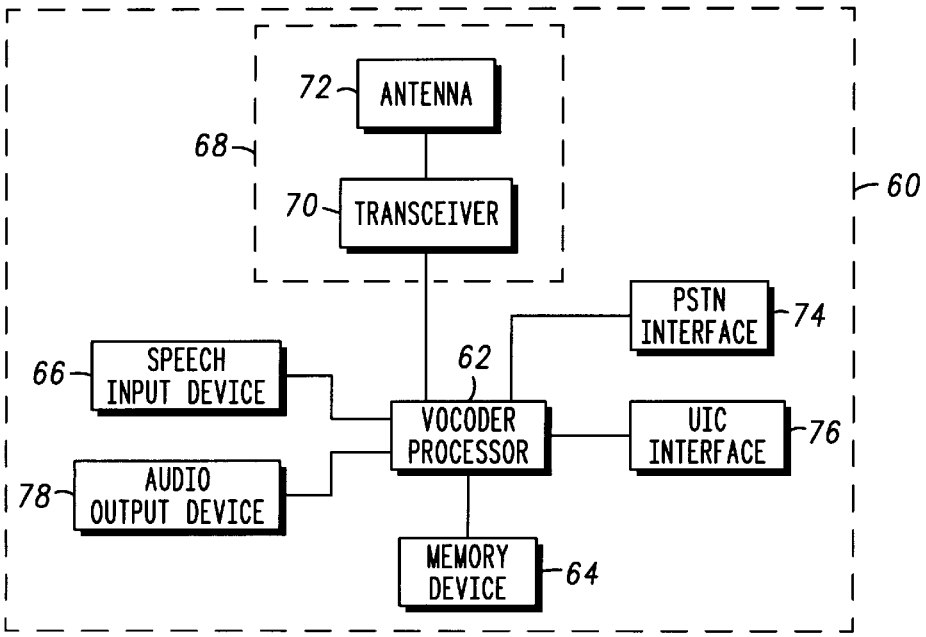
72
ANTENNA
68
70
TRANSCEIVER
60
PSTN INTERFACE
74
66
SPEECH INPUT DEVICE
62
VOCODER PROCESSOR
UIC INTERFACE
76
78
AUDIO OUTPUT DEVICE
MEMORY DEVICE
64

FIG. 3