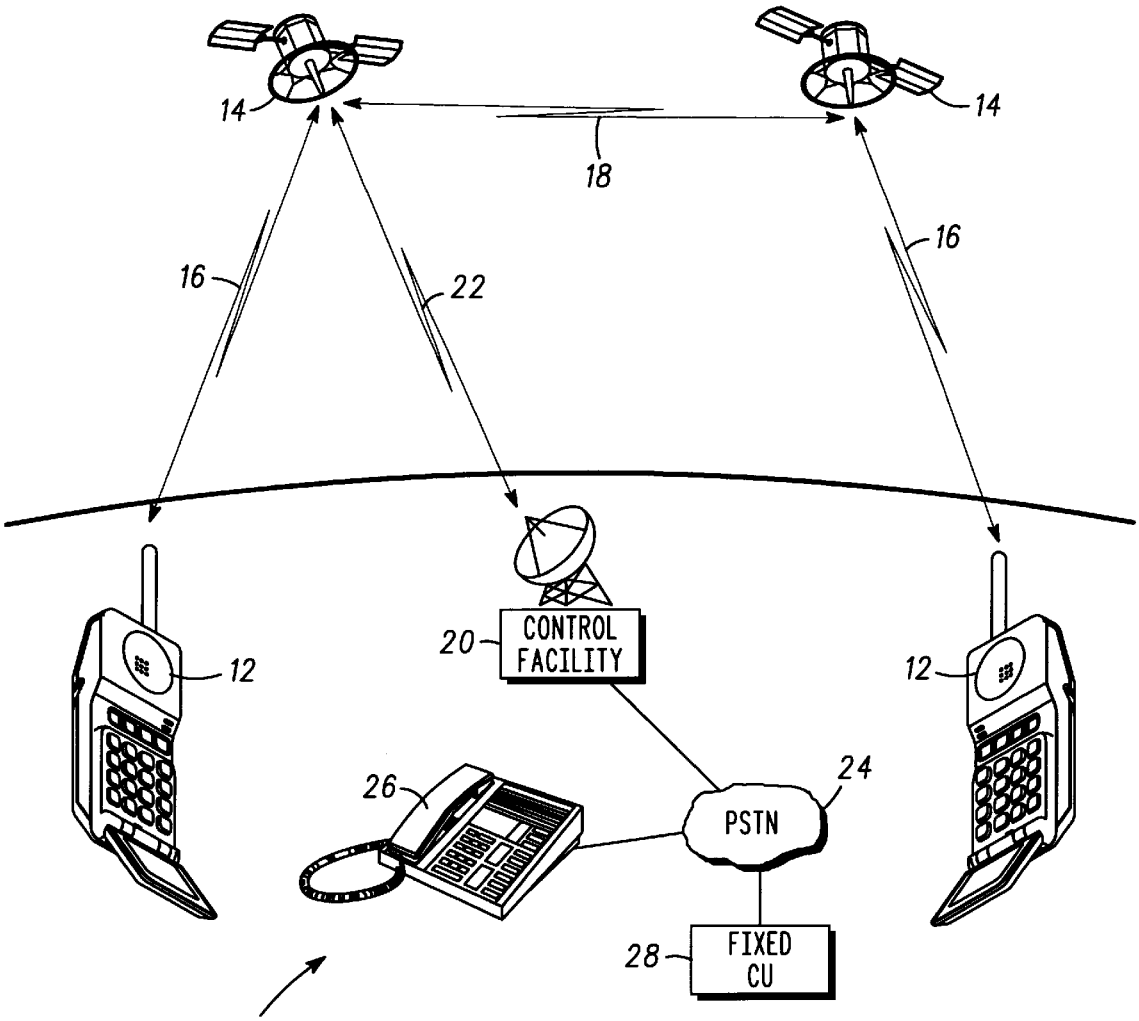
14
14
18
16
16
22
12
12
20
CONTROL FACILITY
26
24
PSTN
28
FIXED CU
10

FIG. 1

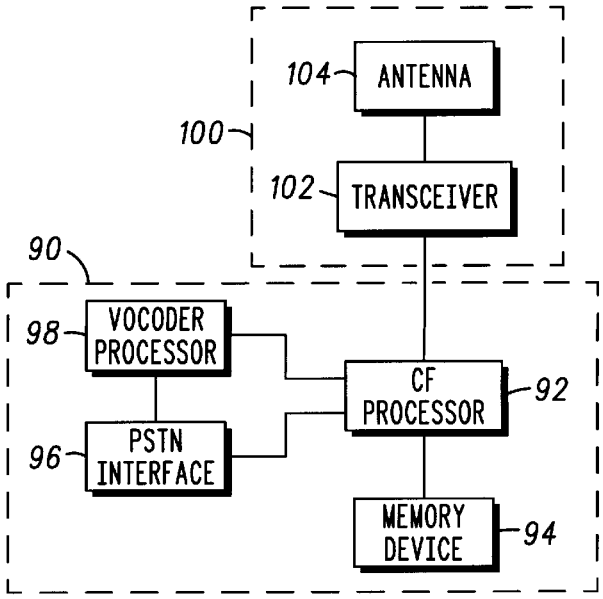
104
ANTENNA
100
102
TRANSCEIVER
90
98
VOCODER PROCESSOR
CF PROCESSOR
92
96
PSTN INTERFACE
MEMORY DEVICE
94

FIG. 4