Dec. 9, 1930. S. LEAR 1,784,736

EASEL SUPPORT

Filed July 2, 1929 2 Sheets-Sheet 1

Fig. 1.

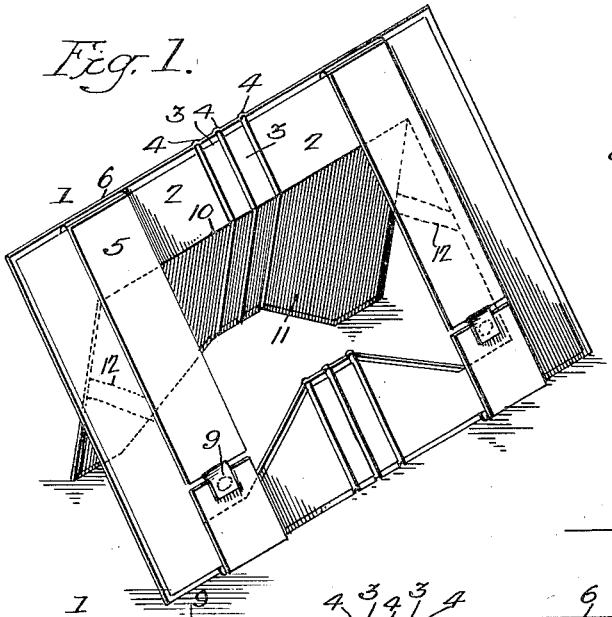

Fig. 3

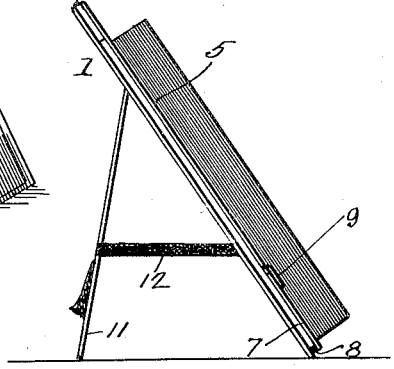

Fig. 4.

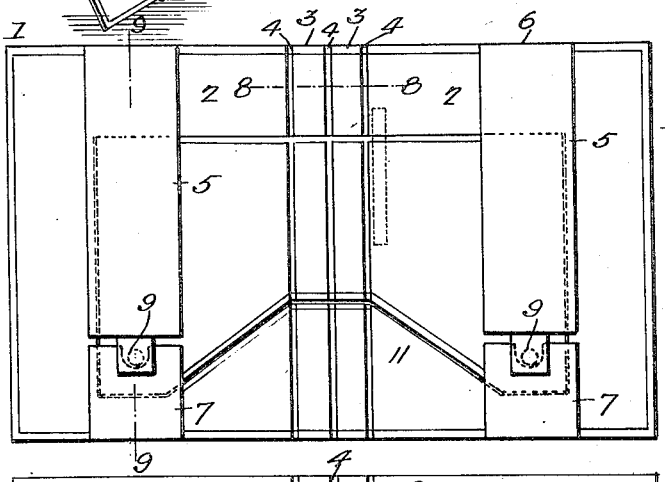

Fig. 5

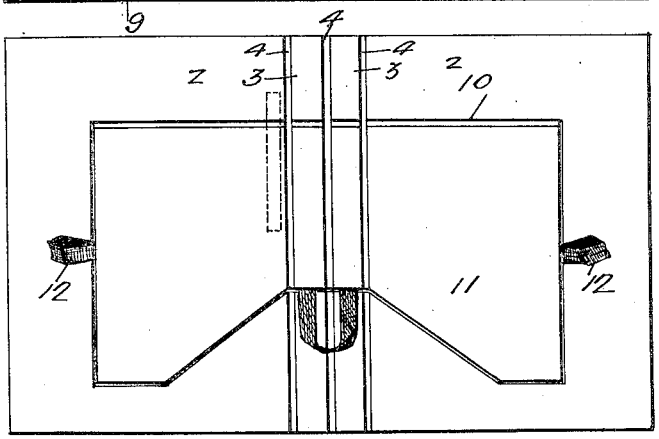

Inventor:
Sidney Lear
by her Attorneys.
Lowson & Thomson