March 5, 1963 H. J. KRATT 3,079,736

TORIC LENS TOOL
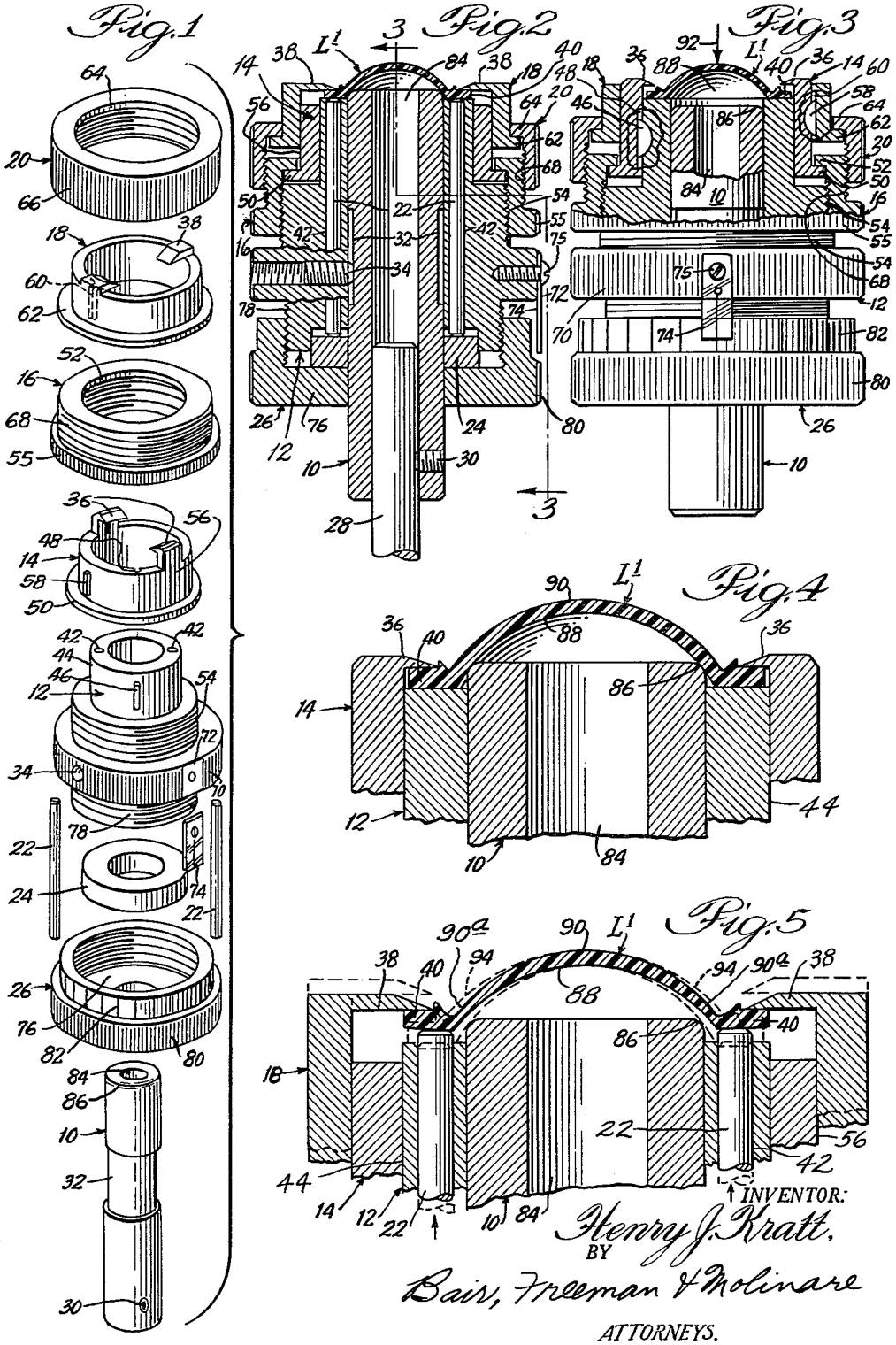
Filed Aug. 22, 1960