PRIOR ART

FIG. 1

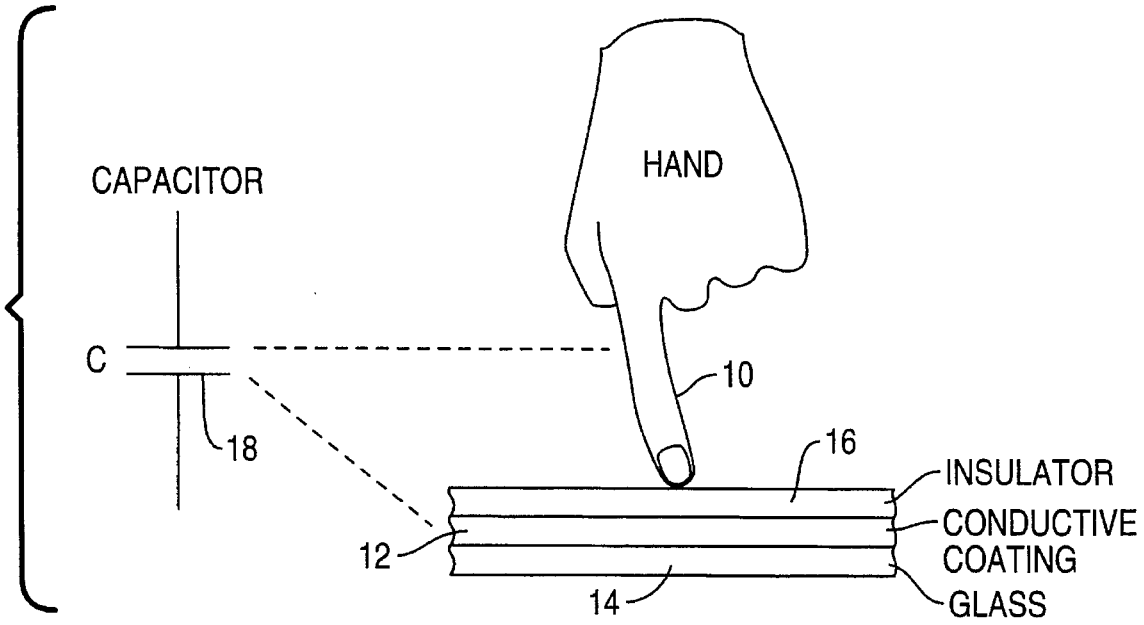

PRIOR ART
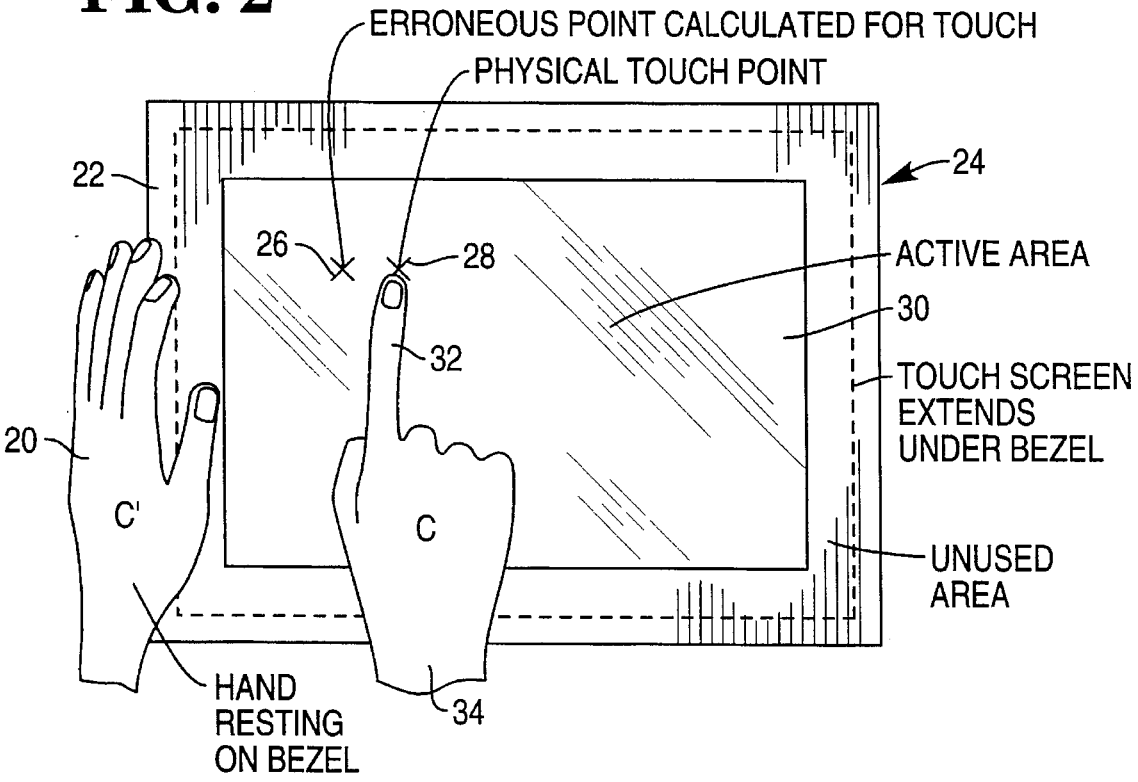
FIG. 2