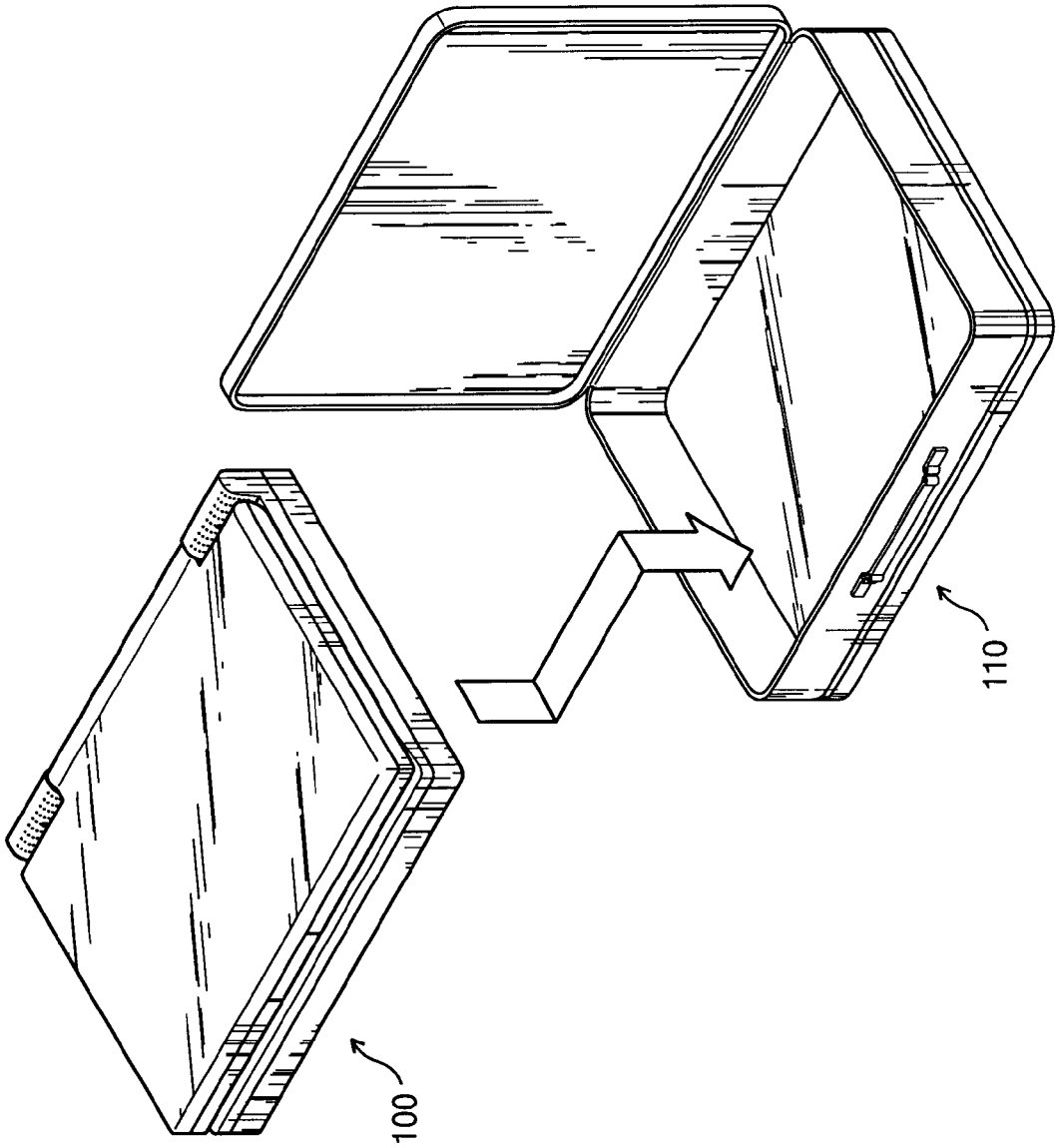

Fig. 1
(Prior Art)