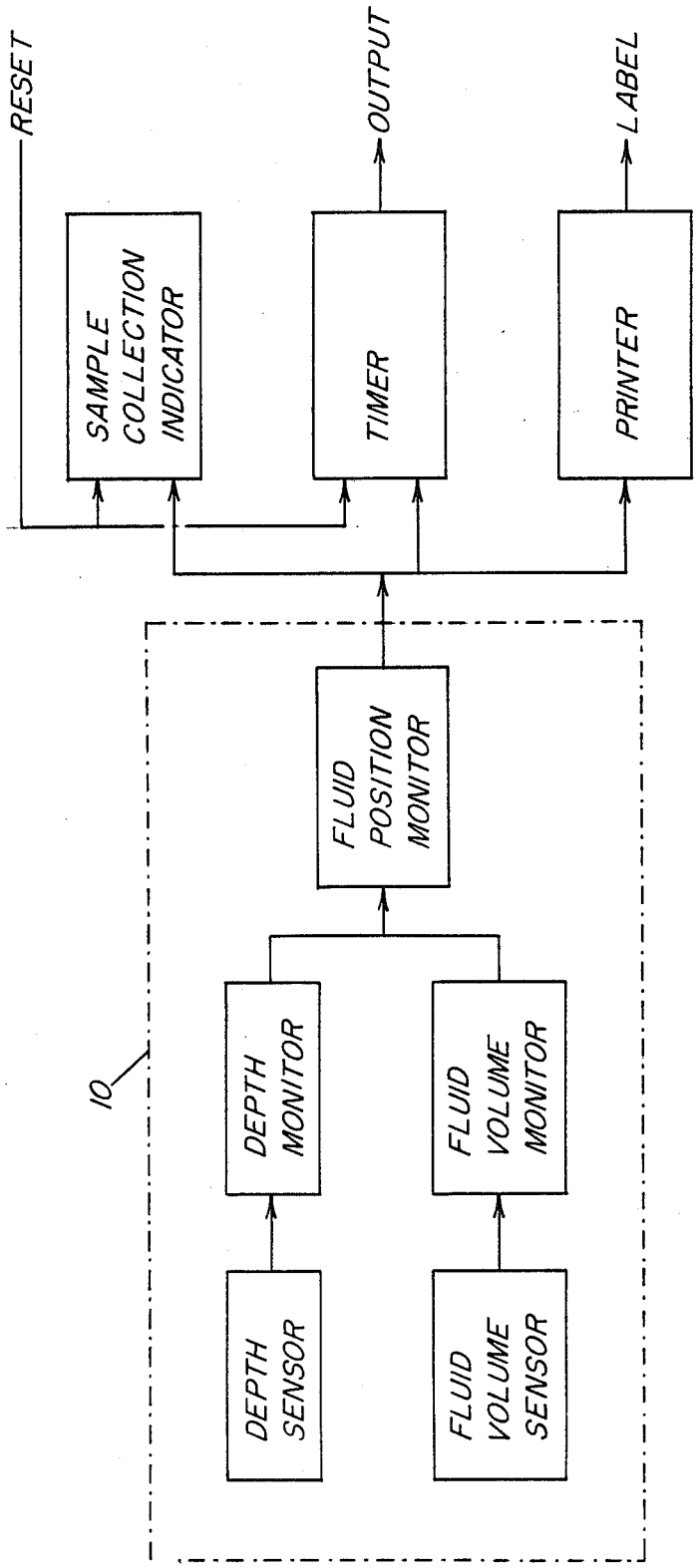
RESET
SAMPLE COLLECTION INDICATOR
OUTPUT
TIMER
LABEL
PRINTER
10
FLUID POSITION MONITOR
DEPTH MONITOR
FLUID VOLUME MONITOR
DEPTH SENSOR
FLUID VOLUME SENSOR

FIG. 1