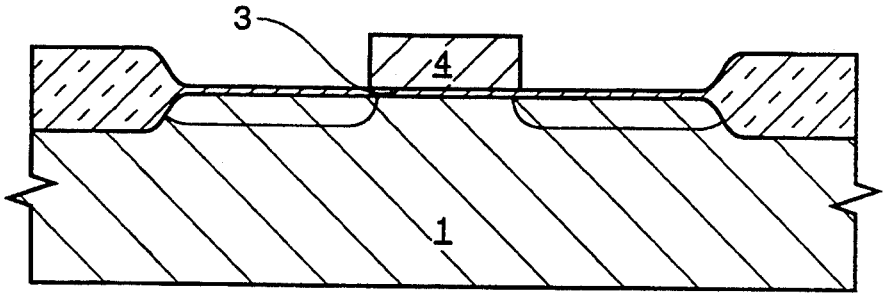


FIG. 1A
(PRIOR ART)

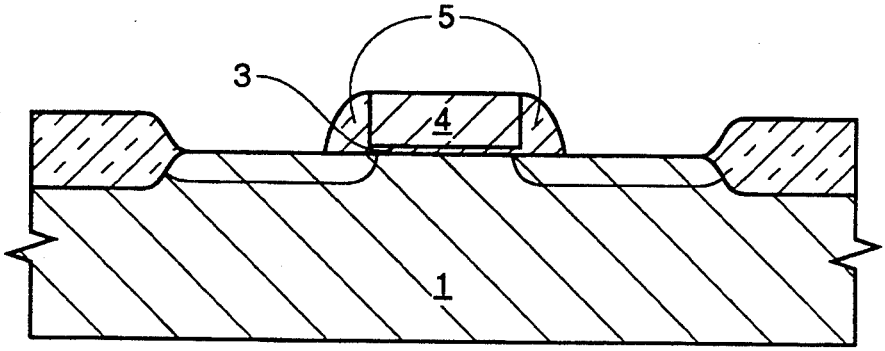


FIG. 1B
(PRIOR ART)

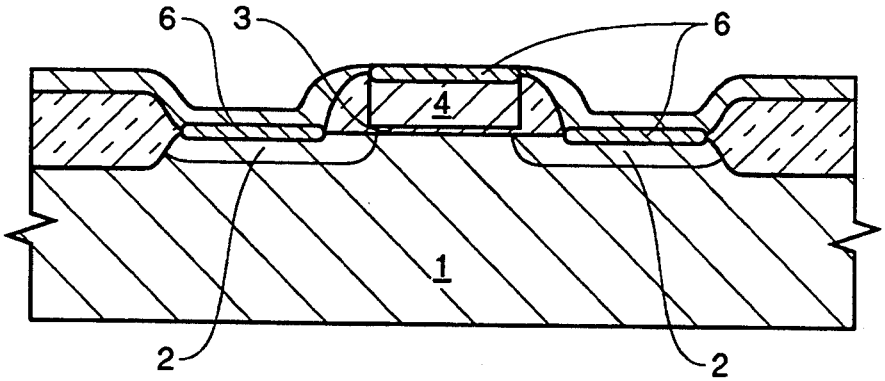


FIG. 1C
(PRIOR ART)