US009636936B2

(12) **United States Patent**
Neeb et al.

(10) **Patent No.: US 9,636,936 B2**
(45) **Date of Patent: May 2, 2017**

(54) **DEVICE FOR PRINTING ON AT LEAST ONE REGION OF THE SURFACE OF AN OBJECT**

(71) Applicant: **HEIDELBERGER DRUCKMASCHINEN AG**, Heidelberg (DE)

(72) Inventors: **Steffen Neeb**, Bensheim (DE); **Roland Stenzel**, Heidelberg (DE)

(73) Assignee: **Heidelberger Druckmaschinen AG**, Heidelberg (DE)

(*) Notice: Subject to any disclaimer, the term of this patent is extended or adjusted under 35 U.S.C. 154(b) by 0 days.

(21) Appl. No.: **15/040,171**

(22) Filed: **Feb. 10, 2016**

(65) **Prior Publication Data**

US 2016/0229208 A1 Aug. 11, 2016

(30) **Foreign Application Priority Data**

Feb. 11, 2015 (DE) 10 2015 202 399

(51) **Int. Cl.**
B41J 29/26 (2006.01)
B41J 3/407 (2006.01)
B41J 19/06 (2006.01)

(52) **U.S. Cl.**
CPC ***B41J 29/26*** (2013.01); ***B41J 3/4073*** (2013.01); ***B41J 19/06*** (2013.01)

(58) **Field of Classification Search**
CPC B41J 29/26; B41J 3/4073
See application file for complete search history.

(56) **References Cited**

U.S. PATENT DOCUMENTS

5,924,809	A	7/1999	Wotton et al.	
6,004,050	A	12/1999	Rehman et al.	
6,296,093	B1	10/2001	Norris et al.	
8,882,242	B2	11/2014	Beier et al.	
2007/0115309	A1*	5/2007	Miura	B41J 2/175 347/9
2009/0195596	A1	8/2009	Oka et al.	
2010/0067938	A1	3/2010	Kemma et al.	
2010/0156970	A1*	6/2010	Ikushima	B05B 12/06 347/8
2015/0042716	A1	2/2015	Beier et al.	
2015/0138275	A1	5/2015	Noell	

FOREIGN PATENT DOCUMENTS

DE	19505426	A1	8/1996
DE	19847062	A1	4/2001
DE	202004002671	U1	4/2004
DE	102012006371	A1	7/2012
DE	102012006370	A1	10/2013
EP	1001184	A2	5/2000
JP	S61195871	A	8/1986
JP	H06262583	A	9/1994

* cited by examiner

Primary Examiner — Alessandro Amari
Assistant Examiner — Roger W Pisha, II
(74) *Attorney, Agent, or Firm* — Laurence A. Greenberg; Werner H. Stemer; Ralph E. Locher

(57) **ABSTRACT**

A device for printing on at least one region of a surface of a so-called 3D object, for instance a curved auto body part, includes a manipulator, for instance an articulated-arm robot with six degrees of freedom. The device also includes a system for vibration compensation for the print head. The system includes an active component and a passive component. Manipulator vibration which creates defects in a printed image may thus be effectively avoided.
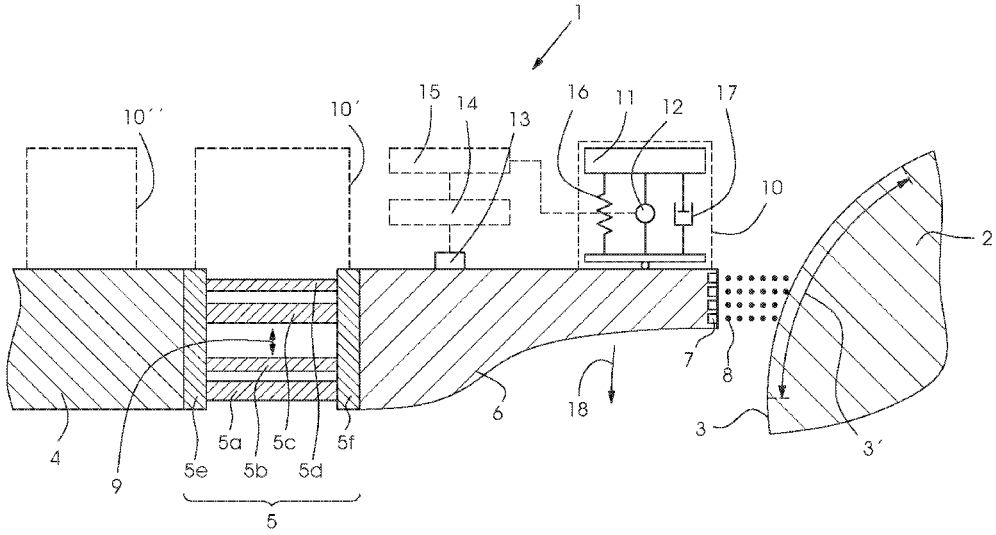
11 Claims, 1 Drawing Sheet