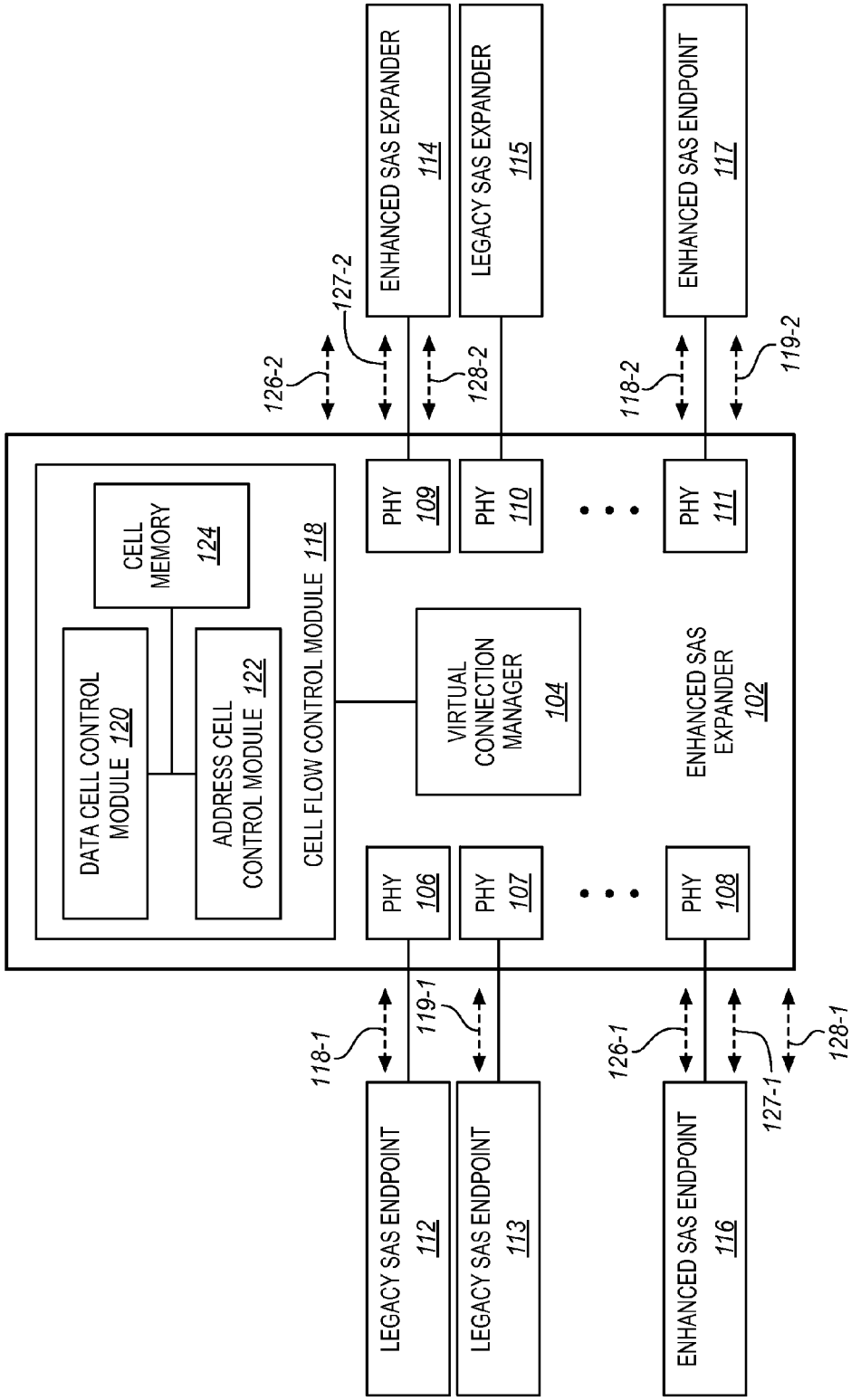
ENHANCED SAS EXPANDER 114
LEGACY SAS EXPANDER 115
ENHANCED SAS ENDPOINT 117
127-2
126-2
128-2
118-2
119-2
PHY 109
PHY 110
PHY 111
CELL MEMORY 124
DATA CELL CONTROL MODULE 120
ADDRESS CELL CONTROL MODULE 122
CELL FLOW CONTROL MODULE 118
VIRTUAL CONNECTION MANAGER 104
ENHANCED SAS EXPANDER 102
PHY 106
PHY 107
PHY 108
118-1
119-1
126-1
127-1
128-1
LEGACY SAS ENDPOINT 112
LEGACY SAS ENDPOINT 113
ENHANCED SAS ENDPOINT 116

FIG. 1