US009436636B2

(12) **United States Patent**
Voorhees et al.

(10) **Patent No.: US 9,436,636 B2**
(45) **Date of Patent: Sep. 6, 2016**

(54) **STRUCTURE FOR NON-BLOCKING SERIAL ATTACHED SCSI INFRASTRUCTURE UTILIZING VIRTUAL PATHWAYS**

(71) Applicant: **LSI Corporation**, Milpitas, CA (US)

(72) Inventors: **William W. Voorhees**, Colorado Springs, CO (US); **Srikiran Dravida**, Colorado Springs, CO (US); **Timothy E. Hoglund**, Colorado Springs, CO (US); **William K. Petty**, Colorado Springs, CO (US)

(73) Assignee: **Avago Technologies General IP (Singapore) Pte. Ltd.**, Singapore (SG)

(*) Notice: Subject to any disclaimer, the term of this patent is extended or adjusted under 35 U.S.C. 154(b) by 310 days.

(21) Appl. No.: **13/710,133**

(22) Filed: **Dec. 10, 2012**

(65) **Prior Publication Data**

US 2014/0164670 A1 Jun. 12, 2014

(51) **Int. Cl.**
G06F 13/40 (2006.01)
G06F 3/06 (2006.01)

(52) **U.S. Cl.**
CPC ***G06F 13/4022*** (2013.01); ***G06F 3/061*** (2013.01); ***G06F 3/0635*** (2013.01); ***G06F 3/0683*** (2013.01)

(58) **Field of Classification Search**
CPC G06F 13/385; G06F 13/4022
USPC 710/316
See application file for complete search history.

(56) **References Cited**

U.S. PATENT DOCUMENTS

7,444,459	B2 *	10/2008	Johnson	711/6
7,624,223	B2 *	11/2009	Clegg et al.	710/316
8,127,059	B1 *	2/2012	Carr et al.	710/74
8,626,981	B1 *	1/2014	Roberts et al.	710/316
2012/0191886	A1 *	7/2012	Ballard et al.	710/106

* cited by examiner

Primary Examiner — Brian Misiura

(57) **ABSTRACT**

Structure is disclosed for a non-blocking SAS architecture utilizing virtual connections between SAS devices. One embodiment comprises a SAS expander. The SAS expander comprises a plurality of physical links (PHYs) and a Virtual Connection Manager (VCM) coupled with the plurality of PHYs. The VCM exchanges information over a plurality of concurrently established virtual pathways between a first PHY of the plurality of PHYs and a second PHY of the plurality of PHYs.
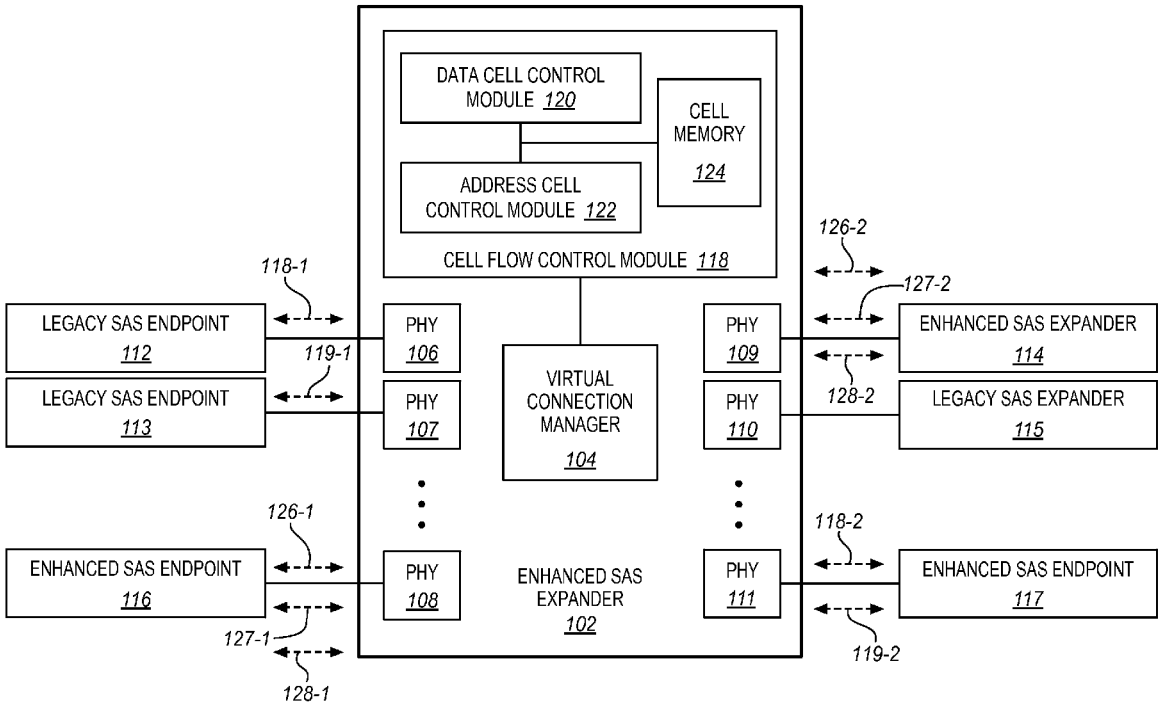
19 Claims, 9 Drawing Sheets