Fig. 1

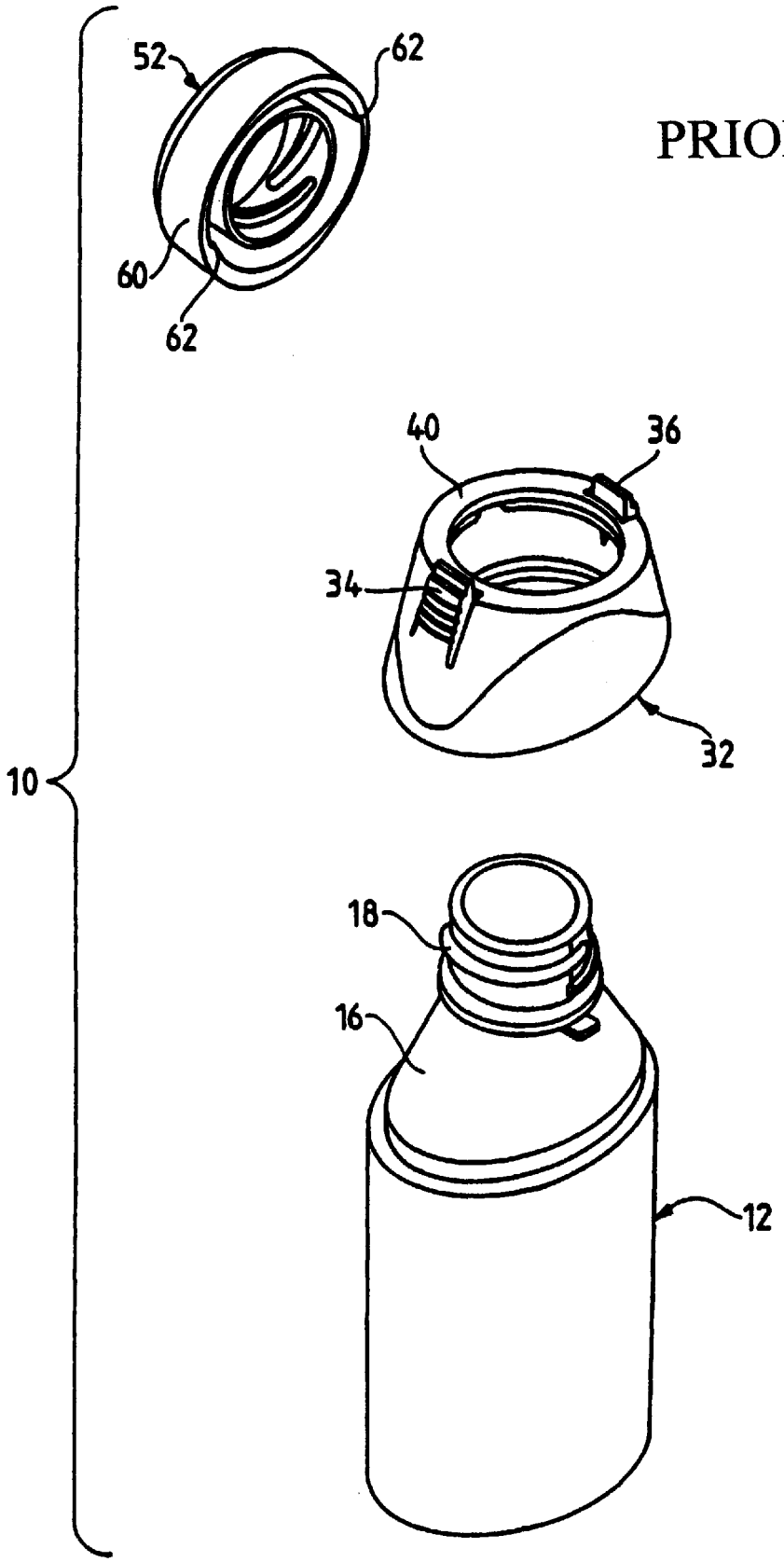

PRIOR ART