US006036036A

United States Patent [19]

Bilani et al.

[11] **Patent Number: 6,036,036**

[45] **Date of Patent: Mar. 14, 2000**

[54] **ADULT FRIENDLY CHILD-RESISTANT PACKAGE**

[75] Inventors: **Nady Bilani**, Strombeek-Bever; **Johan Willy Declerck**, Ichtegem; **Jelle Dankert Vuijk**, Brussels, all of Belgium; **Maurizio Pucci**, Naples, Italy

[73] Assignee: **The Procter & Gamble Company**, Cincinnati, Ohio

[21] Appl. No.: **08/981,376**

[22] PCT Filed: **Jun. 4, 1996**

[86] PCT No.: **PCT/US96/08670**

§ 371 Date: **Mar. 2, 1998**

§ 102(e) Date: **Mar. 2, 1998**

[87] PCT Pub. No.: **WO97/01494**

PCT Pub. Date: **Jan. 16, 1997**

[30] **Foreign Application Priority Data**

Jun. 28, 1995	[EP]	European Pat. Off.	95201764
Dec. 21, 1995	[EP]	European Pat. Off.	95203583

[51] **Int. Cl.**[7] **B65D 50/04**

[52] **U.S. Cl.** **215/216**; 215/219

[58] **Field of Search** 215/216, 217, 215/218, 219, 221, 253, 250, 330, 204, 207, 278; 220/281; 222/548, 551, 562

[56] **References Cited**

U.S. PATENT DOCUMENTS

3,917,097	11/1975	Uhlig .	
4,149,646	4/1979	Julian .	
4,752,014	6/1988	House et al. .	
4,948,002	8/1990	Thorncock et al.	215/215 X
5,078,288	1/1992	Fuchs .	
5,383,564	1/1995	Hamilton et al. .	
5,462,182	10/1995	Opresco	215/217 X

FOREIGN PATENT DOCUMENTS

603090	6/1994	European Pat. Off.	215/216
2676997-A1	12/1992	France .	
WO 90/02692	3/1990	WIPO .	

Primary Examiner—Nathan Newhouse
Attorney, Agent, or Firm—Vanessa M. Nichols

[57] **ABSTRACT**

The child-resistant package **(100)** can be readily opened by an adult with a one-hand operation. The pushtab **(123, 123')**, which together with the interlocking tooth **(119)** form the child-resistant feature of the package, is placed on the closure **(120)**. Therefore, an adult user may easily depress said pushtab and at the same time disengage said closure to open said package by using only one hand for both operations.
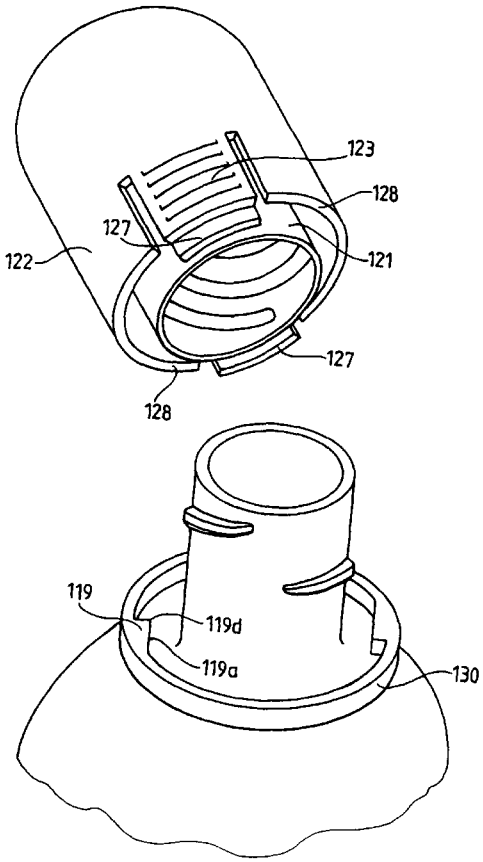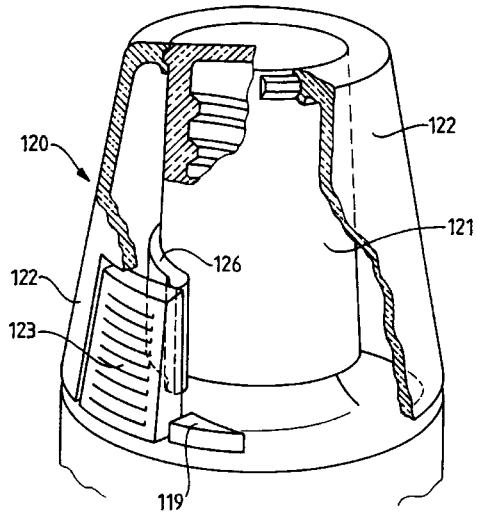
8 Claims, 16 Drawing Sheets