US009034036B2

(12) **United States Patent**
Cumming

(10) **Patent No.: US 9,034,036 B2**
(45) **Date of Patent: *May 19, 2015**

(54) **SEAMLESS-VISION, TILTED INTRAOCULAR LENS**

(71) Applicant: **James Stuart Cumming**, Laguna Beach, CA (US)

(72) Inventor: **James Stuart Cumming**, Laguna Beach, CA (US)

(73) Assignee: **James Stuart Cumming**, Laguna Beach, CA (US)

(*) Notice: Subject to any disclaimer, the term of this patent is extended or adjusted under 35 U.S.C. 154(b) by 0 days.

This patent is subject to a terminal disclaimer.

(21) Appl. No.: **13/953,605**

(22) Filed: **Jul. 29, 2013**

(65) **Prior Publication Data**

US 2014/0172093 A1 Jun. 19, 2014

Related U.S. Application Data

(63) Continuation of application No. 13/472,354, filed on May 15, 2012, now Pat. No. 8,523,942, and a continuation of application No. 13/111,599, filed on May 19, 2011, and a continuation of application No. 13/092,359, filed on Apr. 22, 2011.

(51) **Int. Cl.**
A61F 2/16 (2006.01)

(52) **U.S. Cl.**
CPC ***A61F 2/1613*** (2013.01); ***A61F 2/1616*** (2013.01); *A61F 2002/1689* (2013.01); ***A61F 2/1627*** (2013.01)

(58) **Field of Classification Search**
CPC ... A61F 2/1616; A61F 2/1624; A61F 2/1627; A61F 2002/1681; A61F 2002/1689
USPC 623/6.37, 6.43, 6.46, 6.38, 6.4, 6.44, 623/6.45, 6.47, 6.49
See application file for complete search history.

(56) **References Cited**

U.S. PATENT DOCUMENTS

2,834,023	A	5/1958	Lieb
4,073,014	A	2/1978	Poler
4,118,808	A	10/1978	Poler
4,122,556	A	10/1978	Poler
4,159,546	A	7/1979	Shearing
4,168,547	A	9/1979	Konstantinov et al.
4,173,798	A	11/1979	Welsh
4,174,543	A	11/1979	Kelman
4,206,518	A	6/1980	Jardon et al.
4,244,060	A	1/1981	Hoffer

(Continued)

FOREIGN PATENT DOCUMENTS

CA	2110184 A1	12/1992
CH	681687	5/1993

(Continued)

OTHER PUBLICATIONS

Dykstra, M., et al. Biological Electron Microscopy: Theory, Techniques, and Troublshooting, 2003, p. 81.

(Continued)

Primary Examiner — David H Willse
Assistant Examiner — Javier Blanco
(74) *Attorney, Agent, or Firm* — Knobbe Martens Olson & Bear LLP

(57) **ABSTRACT**

A variable focus intraocular lens comprises an optic coupled to at least one haptic at a rigid flexion that sets a non-zero angle between the optic and the haptic.
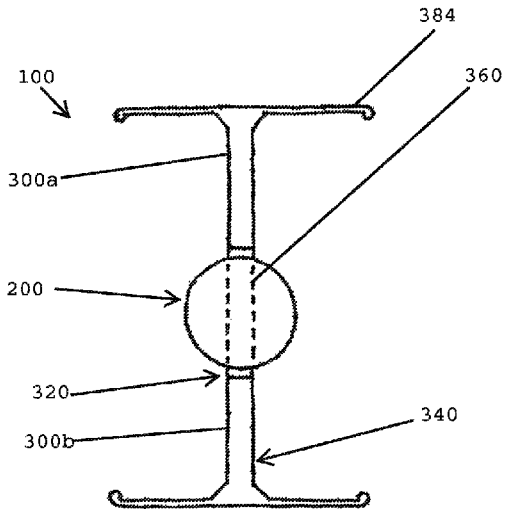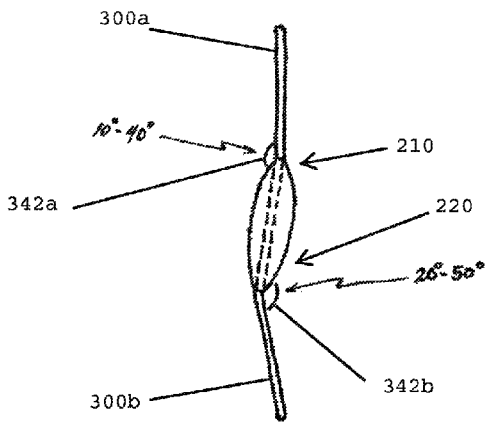
7 Claims, 9 Drawing Sheets