NOZZLE FOR GUNNING REFRACTORY MATERIAL

Filed Feb. 5, 1963 2 Sheets-Sheet 2

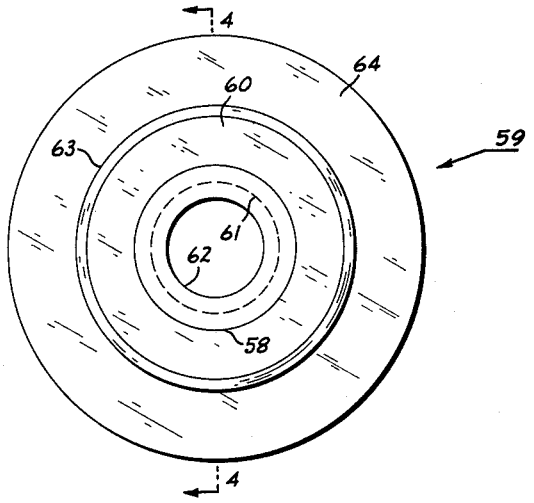


Fig. 3

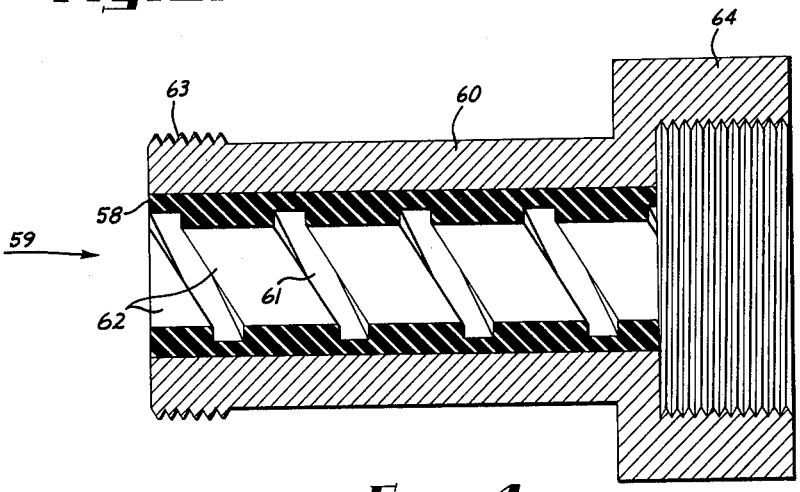


Fig. 4

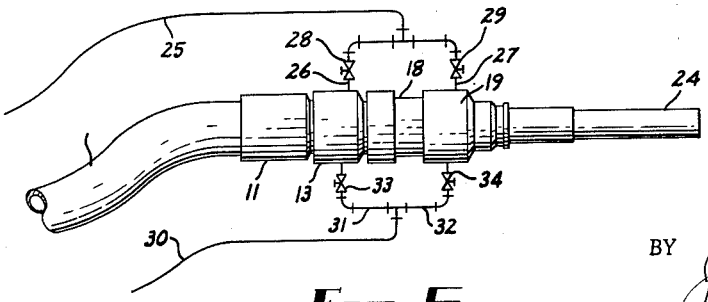


Fig. 5

INVENTOR.
CHESTER N. GRAHN
BY James E. Toomey