NOZZLE FOR GUNNING REFRACTORY MATERIAL

Filed Feb. 5, 1963 2 Sheets-Sheet 1

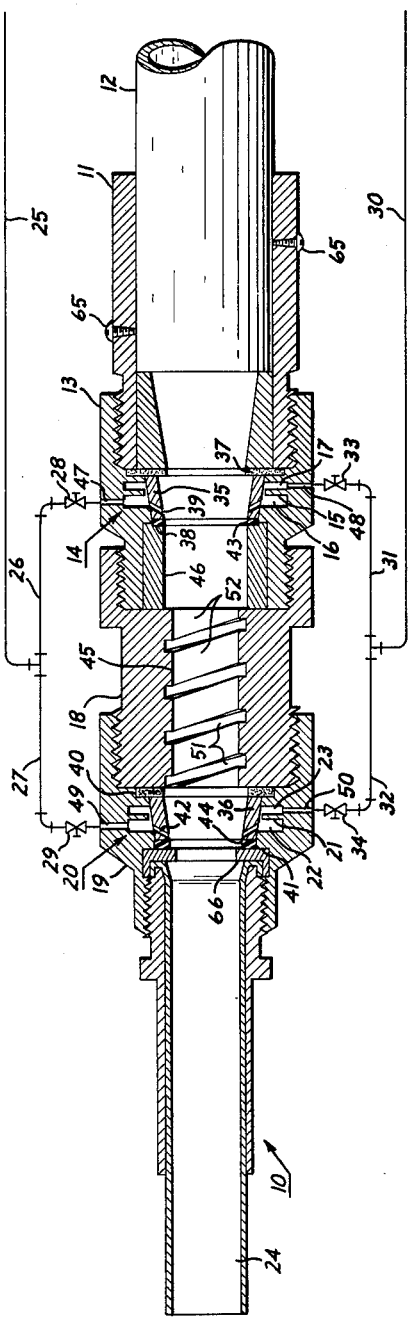

Fig. 1

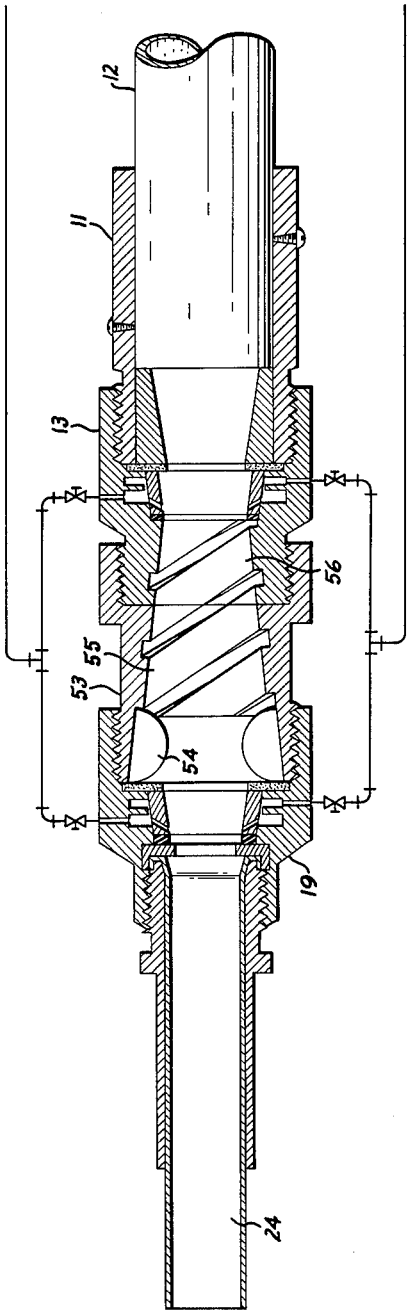

Fig. 2

INVENTOR.
CHESTER N. GRAHN
BY James E. Toomey