United States Patent [19]

Wolinsky

[11] **Patent Number: 4,824,436**

[45] **Date of Patent: Apr. 25, 1989**

[54] **METHOD FOR THE PREVENTION OF RESTENOSIS**

[76] Inventor: **Harvey Wolinsky**, 175 Riverside Dr., New York, N.Y. 10024

[21] Appl. No.: **42,569**

[22] Filed: **Apr. 21, 1987**

[51] **Int. Cl.**[4] **A61M 5/00**

[52] **U.S. Cl.** **604/53**; 604/101

[58] **Field of Search** 604/52–53, 604/101, 102; 128/344, 348.1

[56] **References Cited**

U.S. PATENT DOCUMENTS

4,299,226	11/1981	Banka	604/53 X
4,423,725	1/1984	Baran et al.	604/101 X
4,445,892	5/1984	Hussein	604/101
4,573,966	3/1986	Weikl et al.	604/53

Primary Examiner—Dalton L. Truluck

Attorney, Agent, or Firm—Wyatt, Gerber, Shoup and Badie

[57] **ABSTRACT**

Process for local administration of heparin or other agents to inhibit arterial smooth muscle cell proliferation utilizing a catheter.
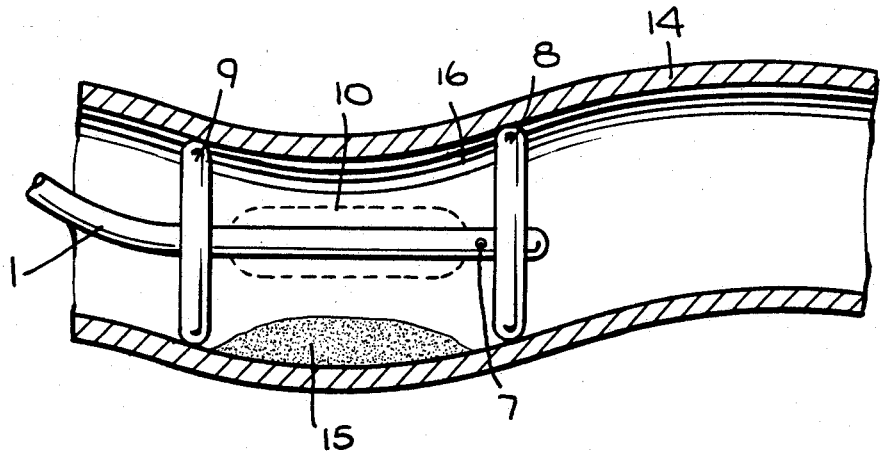
6 Claims, 1 Drawing Sheet