April 5, 1938. C. E. EVANS 2,112,836

LENS GRINDING MACHINE

Original Filed Sept. 8, 1932 7 Sheets-Sheet 1

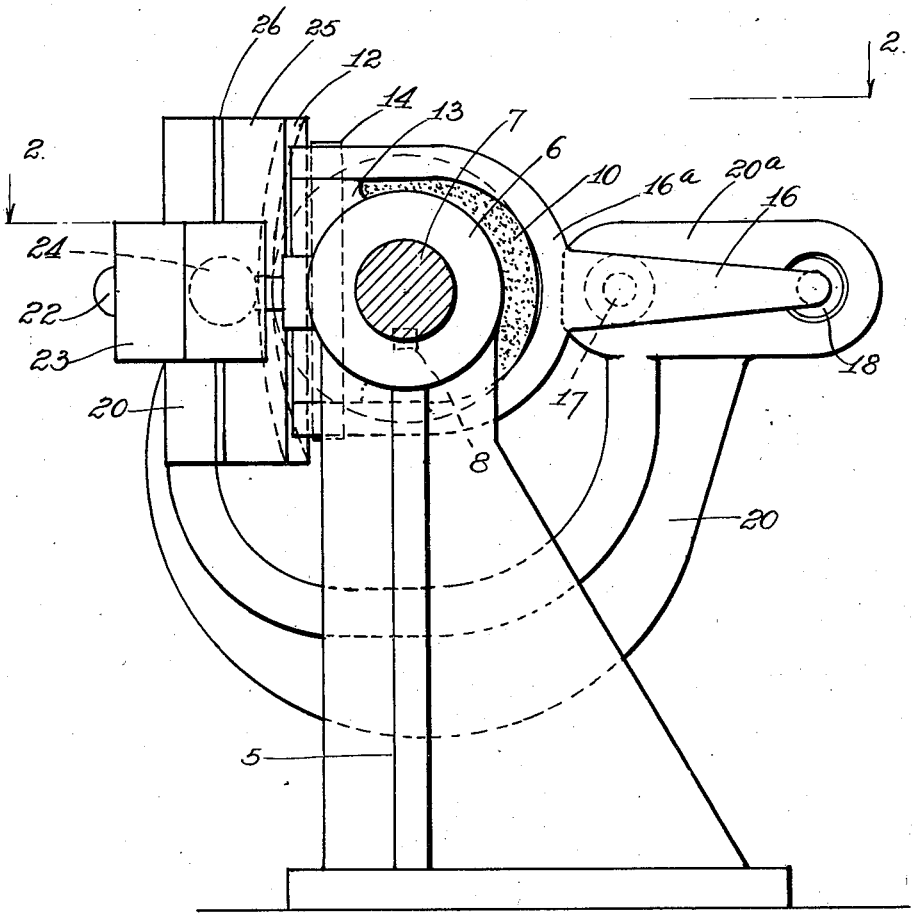

Fig. 1

INVENTOR
Charles E. Evans
by Boulton & Boulton
his Attorneys.