US007512436B2

(12) **United States Patent**
Petty et al.

(10) **Patent No.: US 7,512,436 B2**
(45) **Date of Patent: Mar. 31, 2009**

(54) **METHOD OF EVALUATING METABOLISM OF THE EYE**

(75) Inventors: **Howard R. Petty**, Livonia, MI (US); **Victor M. Elner**, Ann Arbor, MI (US)

(73) Assignee: **The Regents of the University of Michigan**, Ann Arbor, MI (US)

(*) Notice: Subject to any disclaimer, the term of this patent is extended or adjusted under 35 U.S.C. 154(b) by 523 days.

(21) Appl. No.: **10/777,423**

(22) Filed: **Feb. 12, 2004**

(65) **Prior Publication Data**

US 2005/0182327 A1 Aug. 18, 2005

(51) **Int. Cl.**
A61B 3/12 (2006.01)

(52) **U.S. Cl.** **600/476**; 600/473; 600/558; 351/205; 351/206; 351/211; 351/213; 351/221

(58) **Field of Classification Search** 600/317, 600/473, 476, 558; 351/205, 206, 211, 213, 351/221

See application file for complete search history.

(56) **References Cited**

U.S. PATENT DOCUMENTS

4,569,354	A *	2/1986	Shapiro et al.	600/476
6,013,034	A *	1/2000	Fernandes Da Cunha Vaz et al.	600/476
6,236,881	B1 *	5/2001	Zahler et al.	600/476
6,370,422	B1 *	4/2002	Richards-Kortum et al.	600/478
6,371,615	B1 *	4/2002	Schweitzer et al.	351/221
6,478,424	B1 *	11/2002	Grinvald et al.	351/206
6,556,853	B1 *	4/2003	Cabib et al.	600/407
2002/0133080	A1 *	9/2002	Apruzzese et al.	600/477
2003/0004418	A1 *	1/2003	Marmorstein	600/475
2005/0010115	A1 *	1/2005	Bone et al.	600/476
2005/0065436	A1 *	3/2005	Ho et al.	600/431
2005/0159662	A1 *	7/2005	Imanishi et al.	600/473
2005/0208103	A1 *	9/2005	Adamis et al.	424/427

OTHER PUBLICATIONS

Abiko et al., Relationship between autofluorescence and advanced glycation end products in diabetic lenses. 1999. Exp Eye Res. 68:361-6 (Academic Press, Asahikawa, Japan).

Abler A.S., Photic injury triggers apoptosis of photoreceptor cells. 1996. Res Commun Mol Pathol Pharmacol. 92:177-89 (PJD Publications, Westbury, NY, USA).

(Continued)

Primary Examiner—Brian L. Casler
Assistant Examiner—Baisakhi Roy
(74) *Attorney, Agent, or Firm*—Marshall, Gerstein & Borun LLP

(57) **ABSTRACT**

A method and apparatus for measuring the retinal auto-fluorescence of a subject retina includes an excitation light source for providing an excitation light at a wavelength of at least 450 nm and an image capture device for recording an ocular auto-fluorescence signal generated in response to the excitation light. The image capture device includes a filter for reducing background non-signal wavelengths from the ocular auto-fluorescence signal and an image intensifier for increasing the ocular auto-fluorescence signal strength. The method and apparatus may further include a processor that analyzes the ocular auto-fluorescence signal to determine a contrast change or pattern to thereby detect retinal disease or damage. The processor may compare the images with control images, past images of the same eye or other diagnostic modalities such as fundus photography, angiography, or visual field testing to detect the retinal disease or damage.
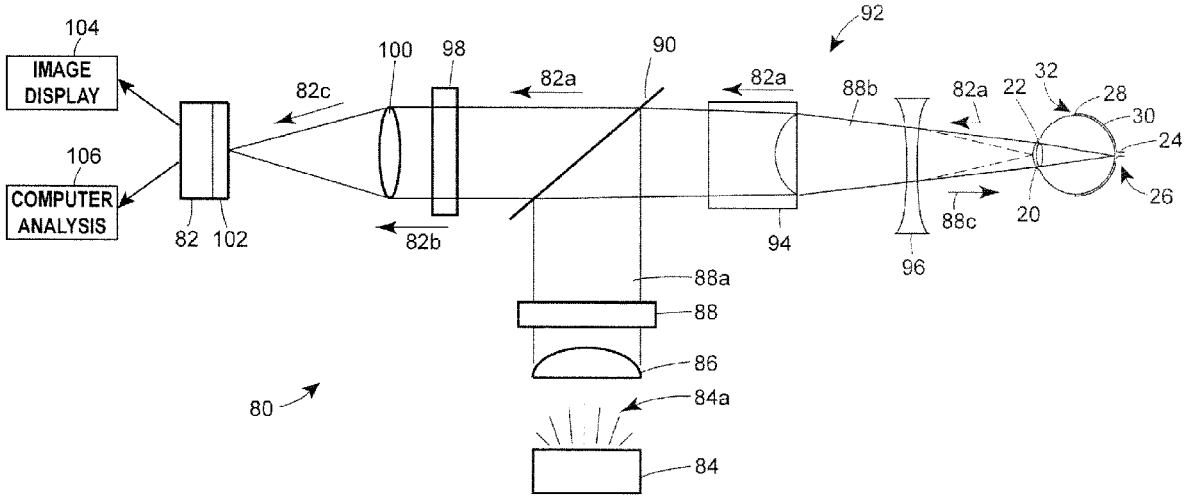
32 Claims, 4 Drawing Sheets