United States Patent [19]

Ditzik

[11] **Patent Number: 4,911,536**

[45] **Date of Patent: Mar. 27, 1990**

[54] **INTERACTIVE GRAPHIC COMUNICATIONS TERMINAL**

[76] Inventor: **Richard J. Ditzik,** 3143 Carnegie Ct., San Diego, Calif. 92122

[21] Appl. No.: **203,948**

[22] Filed: **Jun. 8, 1988**

Related U.S. Application Data

[63] Continuation-in-part of Ser. No. 860,824, May 8, 1986.

[51] **Int. Cl.**[4] **G02F 1/13**

[52] **U.S. Cl.** **350/351;** 350/334; 350/332; 350/345; 340/713; 340/784

[58] **Field of Search** ..... 350/351, 330, 331 R, 350/334, 350 S, 342, 333, 332, 345; 340/713, 784

[56] **References Cited**

U.S. PATENT DOCUMENTS

3,524,998	8/1970	Gilbert	307/299
3,650,608	3/1972	Baker	350/331 R
3,720,784	3/1973	Maydan et al.	178/6.6 R
3,775,757	11/1973	Taylor et al.	340/173 LS
3,796,999	3/1974	Kahn	340/173 R
3,941,927	3/1976	Russell	178/7.6
3,994,567	11/1976	Matsuo et al.	350/332
4,110,794	8/1978	Lester et al.	350/331 R X
4,194,833	3/1980	Lester et al.	350/331 R
4,236,784	12/1980	Palmer	350/96.20
4,422,732	12/1983	Ditzik	350/356
4,464,020	8/1984	Le Berre et al.	350/350 S
4,499,458	2/1985	Le Berre et al.	340/333 X
4,525,032	6/1985	Hilsum	350/331 R
4,568,080	2/1986	Yokoi	340/784
4,649,517	3/1987	Kitazima et al.	350/333 X
4,662,720	5/1987	Fergason	350/334 X
4,688,901	8/1987	Albert	350/350 S
4,723,836	2/1988	Kono et al.	350/331 R
4,765,719	8/1988	Fergason	350/350 S

FOREIGN PATENT DOCUMENTS

7217274	1/1973	France	350/331 R
0007339	1/1984	Japan	340/765
1133757	11/1968	United Kingdom .	

OTHER PUBLICATIONS

D. L. White and M. Feldman, "Liquid Crystal Light Valves", Electronic Letters, vol. 6, No. 26, Dec. 31, 1970, pp. 837–839.

J. F. Stephany and I. P. Gates, "Liquid Crystal Keyboard", Xerox Disclosure Journal, vol. 5, No. 5, Sep.-/Oct. 1980, p. 559.

R. C. Tsai, "High Data Density Four-Color Liquid Crystal Display", Optical Engineering, vol. 21, No. 3, May/Jun. 1982, pp. 565–568.

"Removable Liquid Crystal Display for a Personal Computer", IBM Technical Disclosure Bulletin, vol. 29, No. 10, Mar. 1987.

(List continued on next page.)

Primary Examiner—Stanley D. Miller
Assistant Examiner—Huy K. Mai

[57] **ABSTRACT**

An interactive electro-optic display device used in combination with a transparent graphics tablet device providing an electronic writing surface for an integrated display-tablet operation. A person using the system can hand sketch, write, and draw onto an electronic writing surface, and the system converts this information to electrical signals for display on a viewing screen directly under the transparent graphic tablet. Hand written information from the tablet and alphanumeric information from a keyboard can be transmitted external to the display-tablet unit, and the unit is capable of receiving externally generated data for presentation on the display panel. The invention can be used as a computer-based communications terminal for two-way graphic and voice data. The disclosed display device is a direct view optical beam addressed electrooptic display device, having one or more laser sources, an optical beam deflector, an electrooptic display panel, and control electronics. The graphic tablet and keyboard are electrically connected to the control electronics for an integrated operation. A folded optical path design results in an inclined writing surface and display screen combination, which provide the advantages of improved man-machine interaction and display readability.
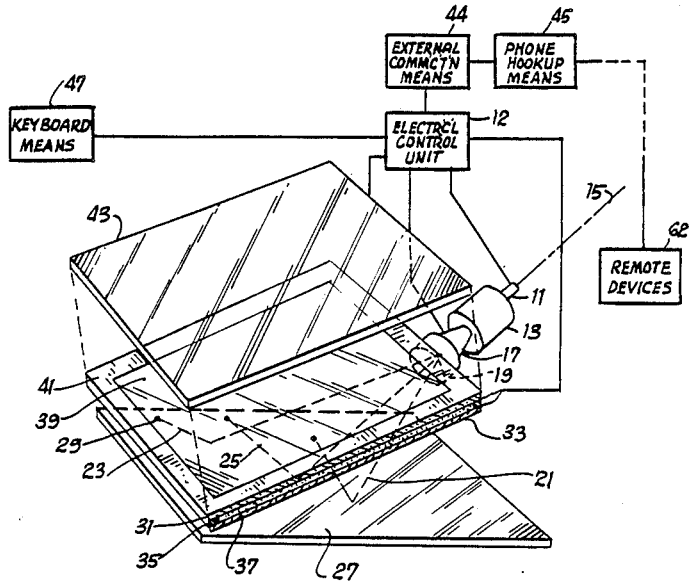
20 Claims, 2 Drawing Sheets