US009510836B2

(12) **United States Patent**
Zhu

(10) **Patent No.: US 9,510,836 B2**
(45) **Date of Patent: Dec. 6, 2016**

(54) **LIVING TISSUE LIGATION DEVICE**

(71) Applicant: **Jian Zhu**, Guangdong (CN)

(72) Inventor: **Jian Zhu**, Guangdong (CN)

(*) Notice: Subject to any disclaimer, the term of this patent is extended or adjusted under 35 U.S.C. 154(b) by 345 days.

(21) Appl. No.: **14/234,642**

(22) PCT Filed: **Nov. 12, 2012**

(86) PCT No.: **PCT/CN2012/084467**
§ 371 (c)(1),
(2) Date: **Jan. 24, 2014**

(87) PCT Pub. No.: **WO2013/067974**
PCT Pub. Date: **May 16, 2013**

(65) **Prior Publication Data**

US 2014/0171973 A1 Jun. 19, 2014

(30) **Foreign Application Priority Data**

Nov. 11, 2011 (CN) 2011 1 0358591

(51) **Int. Cl.**
A61B 17/122 (2006.01)
A61B 17/128 (2006.01)
A61B 17/29 (2006.01)

(52) **U.S. Cl.**
CPC ***A61B 17/122*** (2013.01); ***A61B 17/128*** (2013.01); ***A61B 17/1227*** (2013.01); ***A61B 17/1285*** (2013.01); *A61B 2017/2905* (2013.01)

(58) **Field of Classification Search**
CPC . A61B 17/122; A61B 17/128; A61B 17/1285; A61B 17/12; A61B 17/1227; A61B 2017/12004
USPC 606/139, 142, 143, 151, 157, 158, 219
See application file for complete search history.

(56) **References Cited**

U.S. PATENT DOCUMENTS

5,766,189 A * 6/1998 Matsuno A61B 17/128 606/139
7,108,699 B2 * 9/2006 Kobayashi A61B 17/1285 606/142
7,494,461 B2 * 2/2009 Wells A61B 17/122 600/104
7,854,739 B2 * 12/2010 Satake A61B 17/1285 606/142
8,939,997 B2 * 1/2015 Martinez A61B 17/08 606/1
9,072,520 B2 * 7/2015 Terada A61B 17/1222
2002/0133178 A1 * 9/2002 Muramatsu A61B 17/1285 606/142
2003/0069592 A1 * 4/2003 Adams A61B 17/122 606/142
2004/0133228 A1 * 7/2004 Bayer A61B 17/00008 606/190

(Continued)

Primary Examiner — Todd E Manahan
Assistant Examiner — Charles Wei

(57) **ABSTRACT**

A living tissue ligation device, comprising a clamp (**10**), an operating device (**20**) and a conveying device (**30**); the clamp (**10**) comprising an elastic clip (**11**) and a tightening tube (**12**) to receive the elastic clip (**11**) therein; the operating device (**20**) comprise a handle (**21**) and a slider (**22**) capable of sliding on the handle (**21**); and the conveying device (**30**) comprises an outer connecting mechanism (**31**) and an inner connecting mechanism (**32**). The device can be widely used at various positions in the alimentary canal, can be repeatedly opened and closed, and is simple to operate.
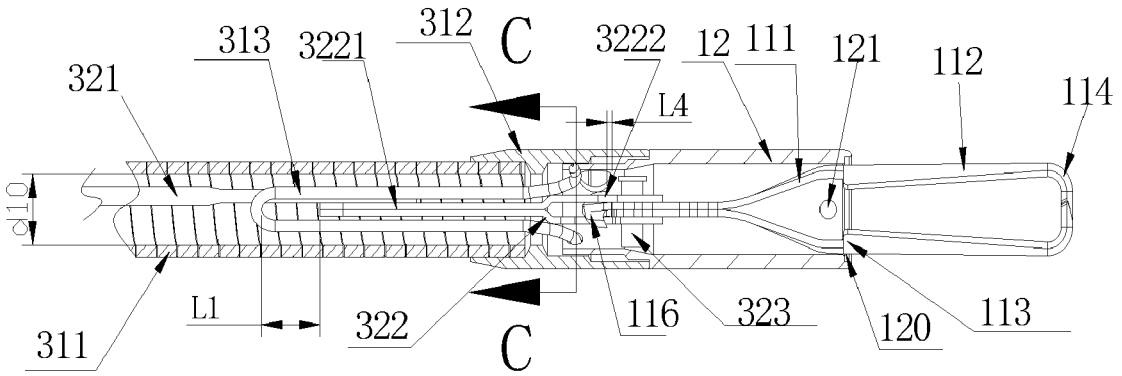
16 Claims, 11 Drawing Sheets