US009410736B2

(12) **United States Patent**
Baxter

(10) **Patent No.: US 9,410,736 B2**
(45) **Date of Patent: Aug. 9, 2016**

(54) **SYSTEMS AND METHODS FOR INTEGRATED ENERGY STORAGE AND CRYOGENIC CARBON CAPTURE**

(71) Applicant: **Larry L. Baxter**, Orem, UT (US)

(72) Inventor: **Larry L. Baxter**, Orem, UT (US)

(73) Assignee: **SUSTAINABLE ENERGY SOLUTIONS, LLC**, Orem, UT (US)

(*) Notice: Subject to any disclaimer, the term of this patent is extended or adjusted under 35 U.S.C. 154(b) by 804 days.

(21) Appl. No.: **13/657,616**

(22) Filed: **Oct. 22, 2012**

(65) **Prior Publication Data**

US 2013/0139543 A1 Jun. 6, 2013

Related U.S. Application Data

(60) Provisional application No. 61/627,998, filed on Oct. 22, 2011.

(51) **Int. Cl.**

F25J 3/00	(2006.01)
F25J 1/00	(2006.01)
F01K 1/08	(2006.01)
F01K 25/10	(2006.01)
F25J 1/02	(2006.01)
F25J 3/06	(2006.01)
F02C 6/14	(2006.01)
B01D 53/00	(2006.01)

(52) **U.S. Cl.**

CPC ***F25J 1/0022*** (2013.01); ***B01D 53/002*** (2013.01); ***F01K 1/08*** (2013.01); ***F01K 25/10*** (2013.01); ***F02C 6/14*** (2013.01); ***F25J 1/0045*** (2013.01); ***F25J 1/0052*** (2013.01); ***F25J 1/023*** (2013.01); ***F25J 1/0208*** (2013.01); ***F25J 1/0236*** (2013.01); ***F25J 1/0251*** (2013.01); ***F25J 3/067*** (2013.01); *B01D 2257/504* (2013.01); *F05D 2260/42* (2013.01); *F05D 2260/61* (2013.01); *F25J 2205/20* (2013.01); *F25J 2210/62* (2013.01); *F25J 2210/70* (2013.01); *F25J 2220/80* (2013.01); *F25J 2220/82* (2013.01); *F25J 2220/84* (2013.01); *F25J 2235/80* (2013.01); *F25J 2240/70* (2013.01); *F25J 2240/82* (2013.01); *F25J 2270/42* (2013.01); *F25J 2270/58* (2013.01); *F25J 2270/60* (2013.01); *F25J 2270/904* (2013.01); *F25J 2280/02* (2013.01); *F25J 2290/80* (2013.01); *Y02C 10/12* (2013.01)

(58) **Field of Classification Search**

CPC F25J 1/0251; F25J 3/067; F25J 1/023; F25J 1/0228; F25J 1/0236; F25J 3/0266; B01D 2257/504; F05D 2260/61; Y02C 10/12; F02C 6/14; F02C 6/18

USPC 62/602, 929, 930

See application file for complete search history.

(56) **References Cited**

U.S. PATENT DOCUMENTS

4,995,234 A * 2/1991 Kooy F01K 25/10 60/648

6,119,445 A 9/2000 Bronicki et al.

(Continued)

FOREIGN PATENT DOCUMENTS

DE	19527882	4/1997
DE	102006035273	2/2008
JP	58018504	2/1983

OTHER PUBLICATIONS

PCT/US2012/061392, Apr. 15, 2013, International Search Report.

Primary Examiner — Keith Raymond

(74) *Attorney, Agent, or Firm* — Workman Nydegger

(57) **ABSTRACT**

The systems and methods integrate energy storage with cryogenic carbon capture, providing effective grid management and energy-efficient carbon capture capabilities to power plants. The systems store energy during off-peak demand by using off-peak energy to compress natural gas to form liquefied natural gas (LNG) and storing the LNG for use as a refrigerant. The systems use the stored LNG as a refrigerant in a cryogenic carbon capture (CCC) process to isolate carbon dioxide from light gases in a flue gas. The systems supply energy during peak demand by burning the natural gas warmed by the CCC process to generate power.
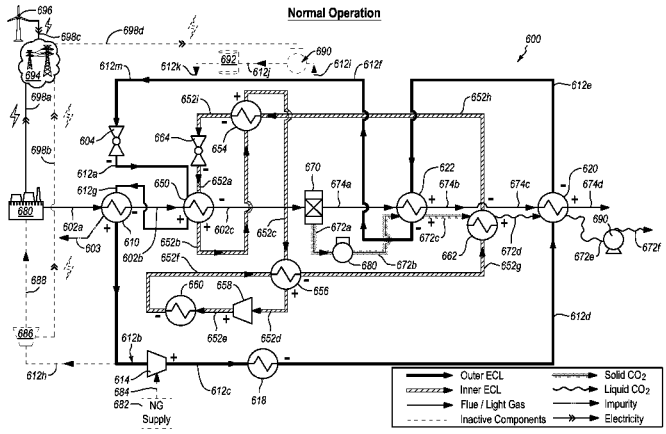
18 Claims, 14 Drawing Sheets