FIG. 1

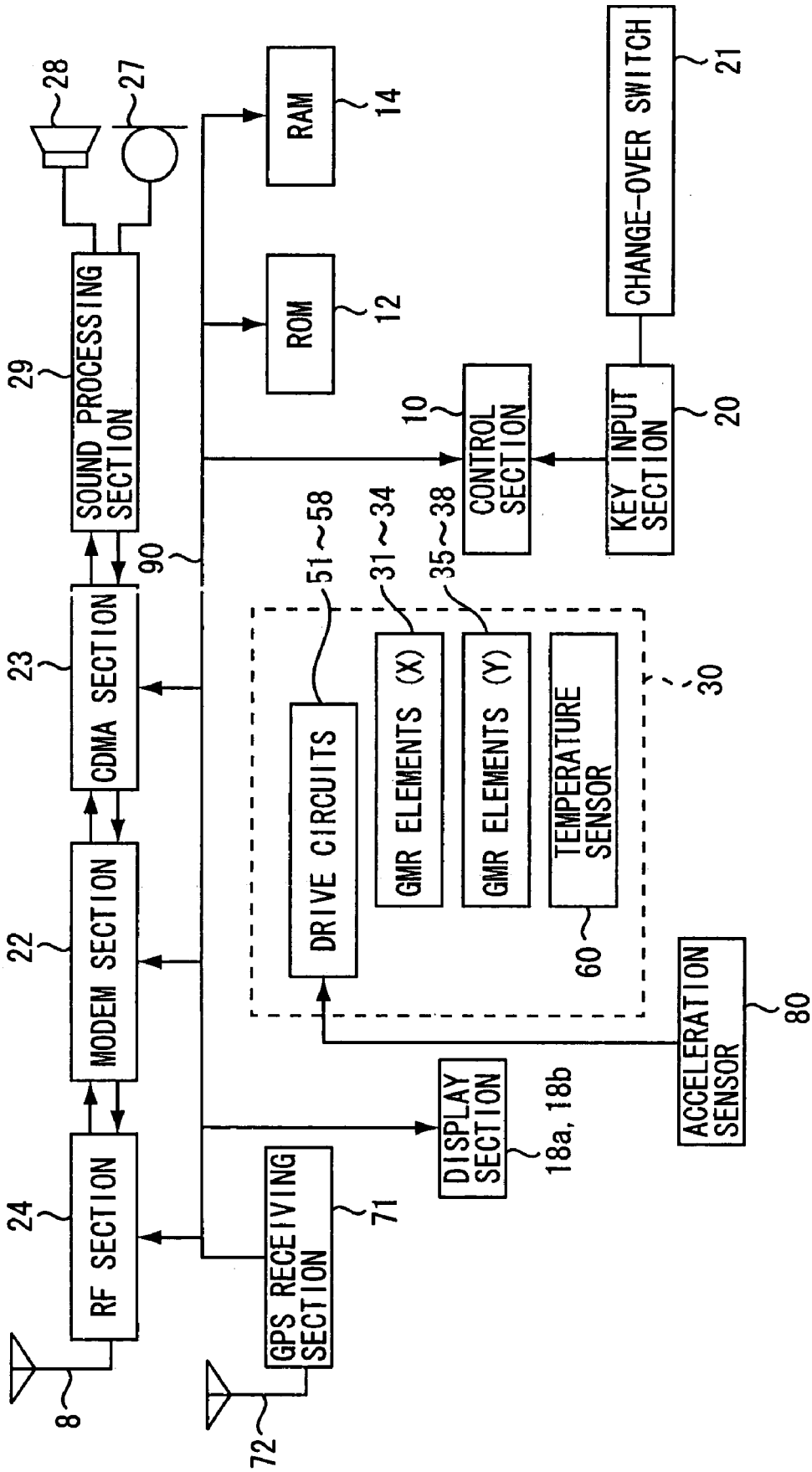
28
27
29
SOUND PROCESSING SECTION
23
CDMA SECTION
22
MODEM SECTION
24
RF SECTION
8
72
GPS RECEIVING SECTION
71
90
RAM
14
ROM
12
10
CONTROL SECTION
CHANGE-OVER SWITCH
21
KEY INPUT SECTION
20
51~58
31~34
35~38
DRIVE CIRCUITS
GMR ELEMENTS (X)
GMR ELEMENTS (Y)
TEMPERATURE SENSOR
60
30
DISPLAY SECTION
18a, 18b
ACCELERATION SENSOR
80