US009408736B2

(12) **United States Patent**
Loewen

(10) **Patent No.: US 9,408,736 B2**
(45) **Date of Patent: Aug. 9, 2016**

(54) **DEVICE FOR DEPLOYING AN IMPLANTABLE MEDICAL DEVICE**

(71) Applicant: **W. L. Gore & Associates, Inc.**, Newark, DE (US)

(72) Inventor: **John L. Loewen**, Salt Lake City, UT (US)

(73) Assignee: **W. L. GORE & ASSOCIATES, INC.**, Newark, DE (US)

(*) Notice: Subject to any disclaimer, the term of this patent is extended or adjusted under 35 U.S.C. 154(b) by 162 days.

(21) Appl. No.: **14/197,488**

(22) Filed: **Mar. 5, 2014**

(65) **Prior Publication Data**

US 2014/0188209 A1 Jul. 3, 2014

Related U.S. Application Data

(63) Continuation of application No. 11/546,798, filed on Oct. 12, 2006, now Pat. No. 8,702,778.

(60) Provisional application No. 60/727,180, filed on Oct. 14, 2005.

(51) **Int. Cl.**

A61F 2/06	(2013.01)
A61F 2/966	(2013.01)
A61F 2/95	(2013.01)

(52) **U.S. Cl.**
CPC . ***A61F 2/966*** (2013.01); ***A61F 2/95*** (2013.01); *A61F 2002/9517* (2013.01)

(58) **Field of Classification Search**
CPC A61F 2002/9517; A61F 2/95; A61F 2/966
USPC 623/1.11, 1.12
See application file for complete search history.

(56) **References Cited**

U.S. PATENT DOCUMENTS

4,386,621	A	6/1983	Redl	
5,707,376	A	1/1998	Kavteladze et al.	
5,788,707	A	8/1998	Del Toro et al.	
6,336,606	B1	1/2002	Smithson et al.	
7,326,236	B2	2/2008	Andreas et al.	
2004/0006380	A1	1/2004	Buck et al.	
2004/0181239	A1	9/2004	Dorn et al.	
2004/0215133	A1	10/2004	Weber et al.	
2005/0004515	A1	1/2005	Hart et al.	
2005/0060016	A1	3/2005	Wu et al.	
2005/0080476	A1	4/2005	Gunderson et al.	
2006/0173524	A1	8/2006	Salahieh et al.	
2006/0282150	A1 *	12/2006	Olson	A61F 2/966 623/1.11
2007/0060999	A1 *	3/2007	Randall	A61F 2/95 623/1.11

FOREIGN PATENT DOCUMENTS

WO	02/087470	11/2002
WO	2005/053574	6/2005

* cited by examiner

Primary Examiner — Katherine M Shi

(57) **ABSTRACT**

Device useful for implanting an implantable device within the vasculature of a patient. The device includes a deployment line, a control component for actuating the deployment line, and an actuation mechanism for translating constant-rate actuation of the control component into variable rate retraction of the deployment line from a remotely deployable implantable device. Suitable implantable devices include, for example, stents and stent grafts.
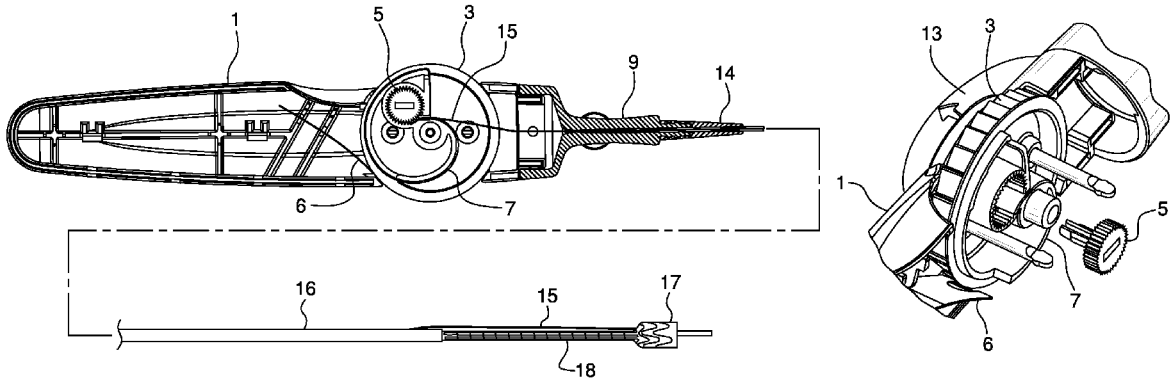
9 Claims, 6 Drawing Sheets