US005703436A

United States Patent [19]

Forrest et al.

[11] Patent Number: 5,703,436

[45] Date of Patent: Dec. 30, 1997

[54] **TRANSPARENT CONTACTS FOR ORGANIC DEVICES**

[75] Inventors: **Stephen R. Forrest**, Princeton, N.J.; **Mark E. Thompson**, Anaheim Hills, Calif.; **Paul E. Burrows**, Princeton, N.J.; **Vladimir Bulovic**, Metuchen, N.J.; **Gong Gu**, Princeton, N.J.

[73] Assignee: **The Trustees Of Princeton University**, Princeton, N.J.

[21] Appl. No.: **613,207**

[22] Filed: **Mar. 6, 1996**

Related U.S. Application Data

[63] Continuation-in-part of Ser. No. 354,674, Dec. 13, 1994.

[51] **Int. Cl.**[6] **H01J 1/62**

[52] **U.S. Cl.** **313/506**; 313/503; 313/509

[58] **Field of Search** 313/498, 503, 313/504, 505, 506, 509; 345/4, 79, 76; 257/40

[56] **References Cited**

U.S. PATENT DOCUMENTS

3,611,069	10/1971	Galginaitis et al. .	
3,783,353	1/1974	Pankove	317/235 R
3,840,873	10/1974	Usui	340/378 R
3,875,456	4/1975	Kano et al.	313/501
4,365,260	12/1982	Holonyak, Jr.	357/17
4,577,207	3/1986	Copeland	357/17
4,605,942	8/1986	Camlibel et al.	357/17
4,900,584	2/1990	Tuenge et al.	427/66
5,059,861	10/1991	Littman	313/503
5,075,743	12/1991	Behfar-Rad	357/17
5,077,588	12/1991	Yamada et al.	357/17
5,144,473	9/1992	Gemma et al.	359/270
5,166,761	11/1992	Olson et al.	257/46

(List continued on next page.)

OTHER PUBLICATIONS

K.L. Chopra et al., "Transparent Conductors–A Status Review", *Thin solid Films*, vol. 102 (1983).

T. Karasawa and Y. Miyata, "Electrical and Optical Properties of Indium Tin Oxide Thin Films Deposited on Unheated Substrates by D.C. Reactive Sputtering", *Thin Solid Films*, vol. 223 (1993).

S.B. Lee et al., "Electronic and Optical Properties of Room Temperature Sputter Deposited Indium Tin Oxide", *J. Vac. Sci. Technol. A*, 11(5), Sep/Oct. 1993.

S. Honda et al., "Oxygen Content of Indium Tin Oxide Films Fabricated by Reactive Sputtering", *J. Vac. Sci. Technol. A*, 13(3), May/Jun. 1995.

(List continued on next page.)

Primary Examiner—Sandra L. O'Shea
Assistant Examiner—Vip Patel
Attorney, Agent, or Firm—Watov & Kipnes, P. C.

[57] **ABSTRACT**

A multicolor organic light emitting device employs vertically stacked layers of double heterostructure devices which are fabricated from organic compounds. The vertical stacked structure is formed on a glass base having a transparent coating of ITO or similar metal to provide a substrate. Deposited on the substrate is the vertical stacked arrangement of three double heterostructure devices, each fabricated from a suitable organic material. Stacking is implemented such that the double heterostructure with the longest wavelength is on the top of the stack. This constitutes the device emitting red light on the top with the device having the shortest wavelength, namely, the device emitting blue light, on the bottom of the stack. Located between the red and blue device structures is the green device structure. The devices are configured as stacked to provide a staircase profile whereby each device is separated from the other by a thin transparent conductive contact layer to enable light emanating from each of the devices to pass through the semitransparent contacts and through the lower device structures while further enabling each of the devices to receive a selective bias. The devices are substantially transparent when de-energized, making them useful for heads-up display applications.
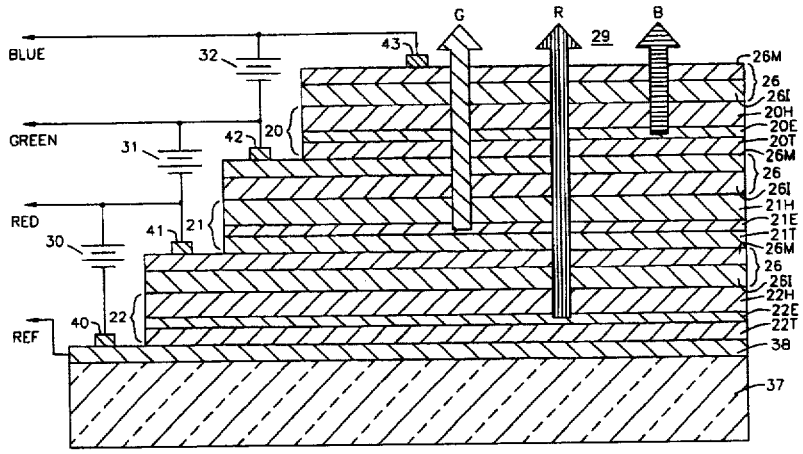
29 Claims, 25 Drawing Sheets