US007401836B2

(12) **United States Patent**
Petty

(10) **Patent No.: US 7,401,836 B2**
(45) **Date of Patent: Jul. 22, 2008**

(54) **SUN SCREEN AND DISPLAY SYSTEM FOR PICKUP TRUCKS AND THE LIKE**

(76) Inventor: **Malcolm Petty**, P.O. Box 57, Cresson, TX (US) 76035

(*) Notice: Subject to any disclaimer, the term of this patent is extended or adjusted under 35 U.S.C. 154(b) by 64 days.

(21) Appl. No.: **11/181,434**

(22) Filed: **Jul. 14, 2005**

(65) **Prior Publication Data**

US 2006/0012201 A1 Jan. 19, 2006

Related U.S. Application Data

(60) Provisional application No. 60/588,267, filed on Jul. 15, 2004.

(51) **Int. Cl.**
B60J 1/20 (2006.01)

(52) **U.S. Cl.** **296/95.1**; 296/97.2; 296/97.4; 150/168; 160/370.21

(58) **Field of Classification Search** 40/502, 40/503, 506; 49/61, 62, 63, 67; 52/473; 150/168; 160/107, 370.21; 296/21, 95.1, 296/97.2, 97.4, 97.7, 152
See application file for complete search history.

(56) **References Cited**

U.S. PATENT DOCUMENTS

3,135,063 A * 6/1964 Ricks 40/502
3,383,785 A * 5/1968 Werner 40/502
5,203,394 A * 4/1993 Hailey 160/166.1

* cited by examiner

Primary Examiner—Lori I. Lyjak
(74) *Attorney, Agent, or Firm*—Michael A. O'Neil

(57) **ABSTRACT**

An accessory for a pickup truck ad the like comprising a frame positioned behind the rear window thereof. The frame supports a plurality of louvers which are selectively positionable in first, second, and third orientations. The louvers are substantially transparent and at least one exterior surface thereof is reflective. The louvers are adapted to display selected graphics when positioned in the first and third orientations. The accessory may also employ triangular louvers which may be adapted to display selected graphics which positioned in the first, second, and third orientations.
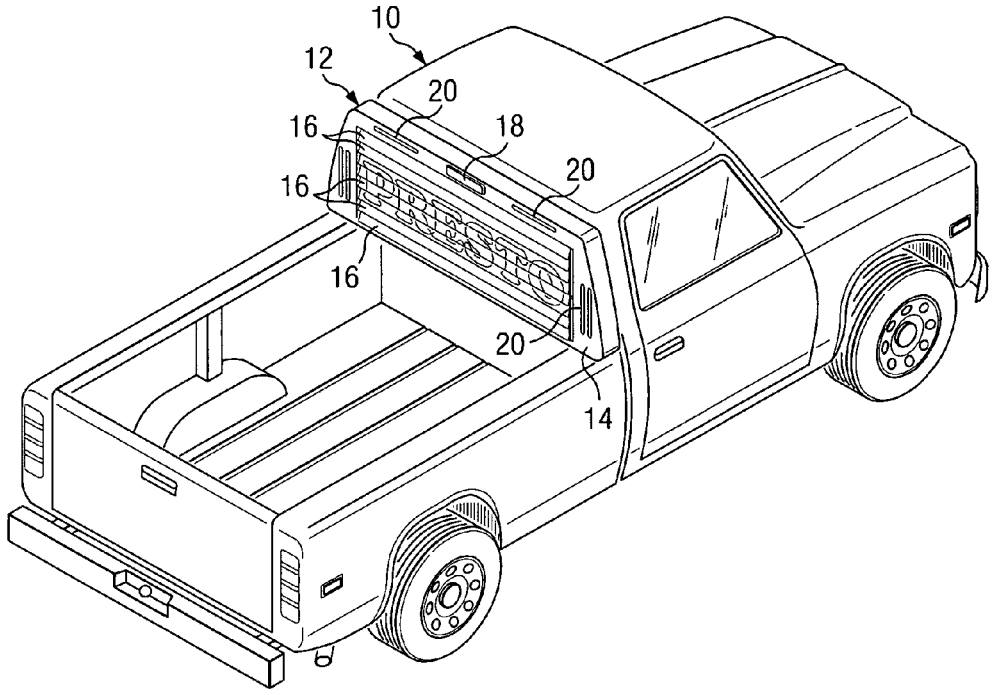
11 Claims, 7 Drawing Sheets