US008399035B2

(12) **United States Patent**
Kirschner et al.

(10) **Patent No.: US 8,399,035 B2**
(45) **Date of Patent: *Mar. 19, 2013**

(54) **POD FOR DISPERSIBLE MATERIALS**

(75) Inventors: **Jonathan Kirschner**, Powder Springs, GA (US); **Carter Crittenden Bennett**, Lilburn, GA (US)

(73) Assignee: **The Coca-Cola Company**, Atlanta, GA (US)

(*) Notice: Subject to any disclaimer, the term of this patent is extended or adjusted under 35 U.S.C. 154(b) by 0 days.

This patent is subject to a terminal disclaimer.

(21) Appl. No.: **13/108,444**

(22) Filed: **May 16, 2011**

(65) **Prior Publication Data**

US 2011/0262597 A1 Oct. 27, 2011

Related U.S. Application Data

(60) Division of application No. 11/754,690, filed on May 29, 2007, now Pat. No. 7,964,230, which is a continuation-in-part of application No. 11/462,444, filed on Aug. 4, 2006, now Pat. No. 7,947,316.

(51) **Int. Cl.**
A23L 2/38 (2006.01)
B65B 29/02 (2006.01)

(52) **U.S. Cl.** **426/80**; 426/431; 426/433; 426/435; 426/77; 426/78; 426/79; 426/112; 99/287; 99/275; 99/295

(58) **Field of Classification Search** 426/433, 426/435, 77, 78, 79, 112, 80, 431; 99/287, 99/275, 295
See application file for complete search history.

(56) **References Cited**

U.S. PATENT DOCUMENTS

1,951,357	A		3/1934	Hall
2,162,272	A		6/1939	Patterson
2,292,101	A	*	8/1942	Brown 426/77
2,589,783	A		3/1952	Crossley et al.
2,743,664	A		5/1956	Dale
2,778,739	A		1/1957	Rodth
2,968,560	A		1/1961	Goros
3,151,418	A		10/1964	Powell et al.
3,275,448	A		9/1966	Sommer
3,428,460	A		2/1969	Ely
3,589,272	A		6/1971	Bouladon et al.
3,713,842	A		1/1973	Lubsen et al.
3,812,273	A		5/1974	Schmidt
3,823,656	A		7/1974	Veken
3,888,999	A		6/1975	Jones et al.
3,952,641	A		4/1976	Vitous
4,081,560	A		3/1978	Ishigaki
4,107,339	A		8/1978	Shrimpton

(Continued)

FOREIGN PATENT DOCUMENTS

BE	701863	1/1968
EP	0272922 A2	6/1988

(Continued)

OTHER PUBLICATIONS

PCT International Report on Patentability for PCT/US2007/072730 issued Feb. 10, 2009.

(Continued)

Primary Examiner — Anthony Weier
(74) *Attorney, Agent, or Firm* — Sutherland Asbill & Brennan LLP

(57) **ABSTRACT**

A pod for mixing an amount of a dispersible material with water. The pod may include a pod body having a lower aperture and a poppet positioned within the aperture. The poppet may be sized so as to seal the lower aperture until a predetermined pressure is reached within the pod body.
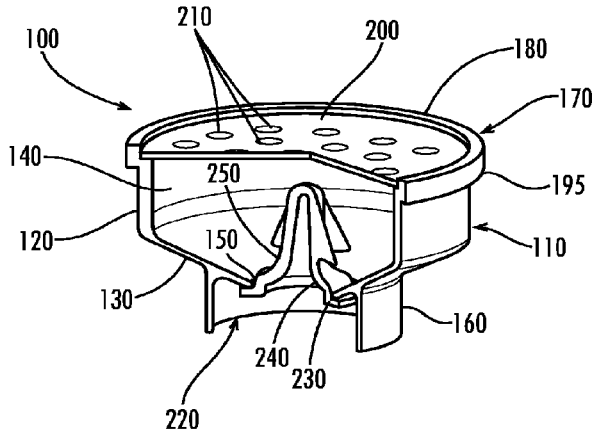
7 Claims, 6 Drawing Sheets