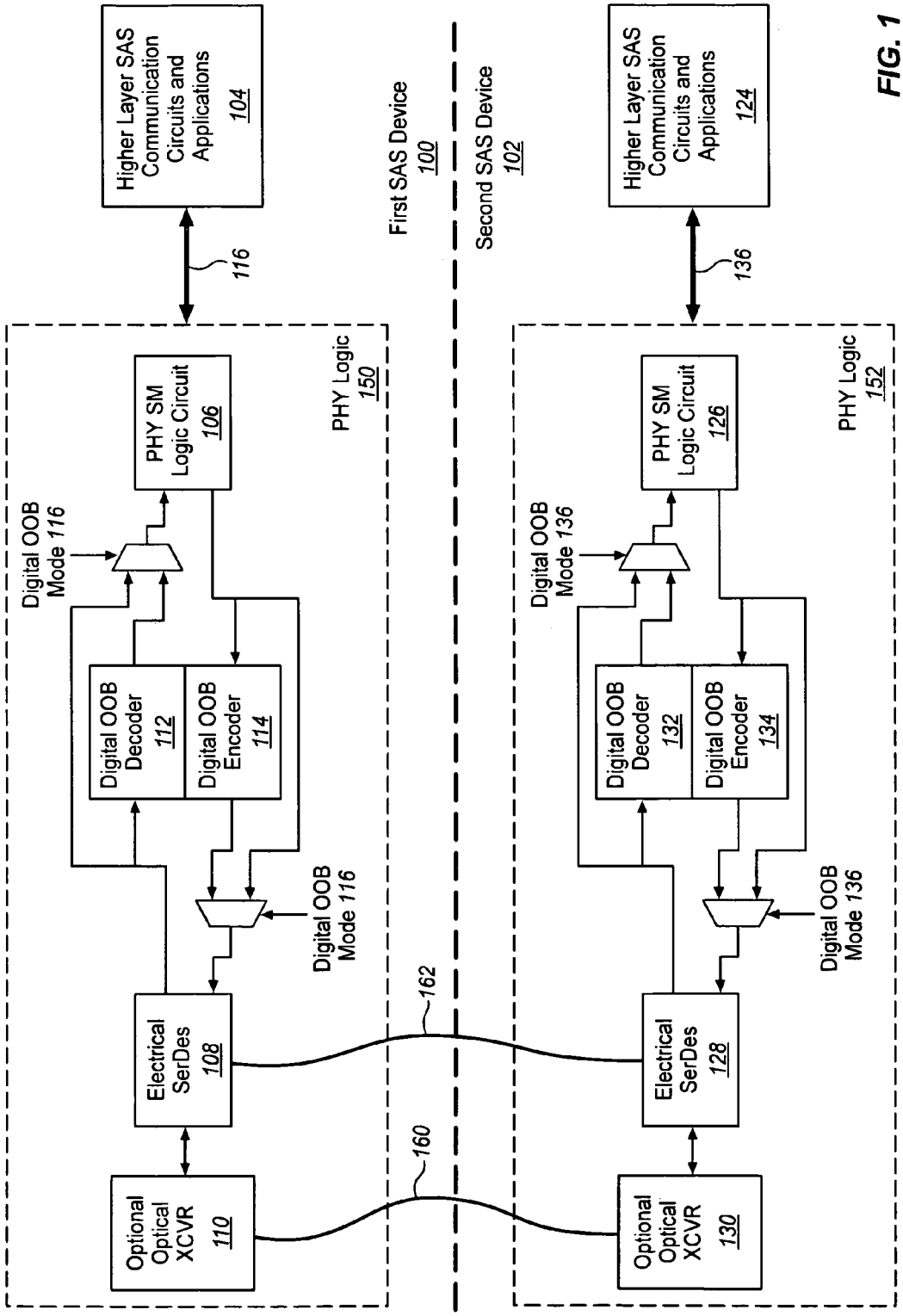
Higher Layer SAS Communication Circuits and Applications 104
116
PHY Logic 150
PHY SM Logic Circuit 106
Digital OOB Mode 116
Digital OOB Decoder 112
Digital OOB Encoder 114
Digital OOB Mode 116
Electrical SerDes 108
Optional Optical XCVR 110
First SAS Device 100
Second SAS Device 102
162
160
Higher Layer SAS Communication Circuits and Applications 124
136
PHY Logic 152
PHY SM Logic Circuit 126
Digital OOB Mode 136
Digital OOB Decoder 132
Digital OOB Encoder 134
Digital OOB Mode 136
Electrical SerDes 128
Optional Optical XCVR 130

FIG. 1