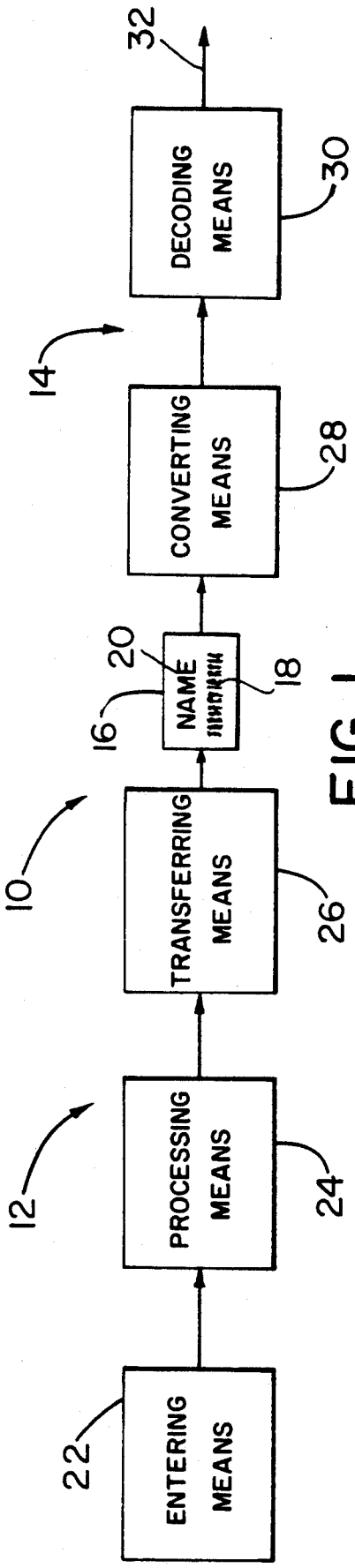
ENTERING MEANS
PROCESSING MEANS
TRANSFERRING MEANS
NAME
CONVERTING MEANS
DECODING MEANS
22
12
24
10
26
16
20
18
28
14
30
32

FIG. 1

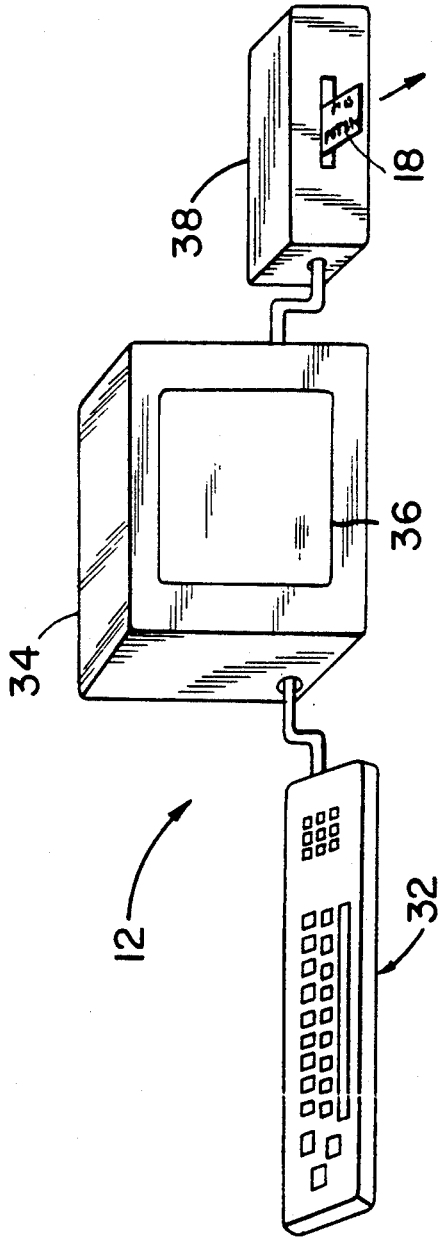
38
18
34
36
12
32

FIG. 2